REVISION HISTORY			
REV	DESCRIPTION	DATE	APPROVAL
A	REVISED AND PARTIALLY REDRAWN BY T H NGUYEN. (5) DIMENSION CHANGED. (6) NOTE CHANGED.	06-10-19	R VOTAW

NOTE(S):

2.1 USE CEMENT, FIND NO 47 TO ADHERE CAP, FIND NO 41 TO ONE END OF PIPE, FIND NO 34.

2.2 CUT OUT FLOOR LINOLEUM PER FIND NO 45. A6

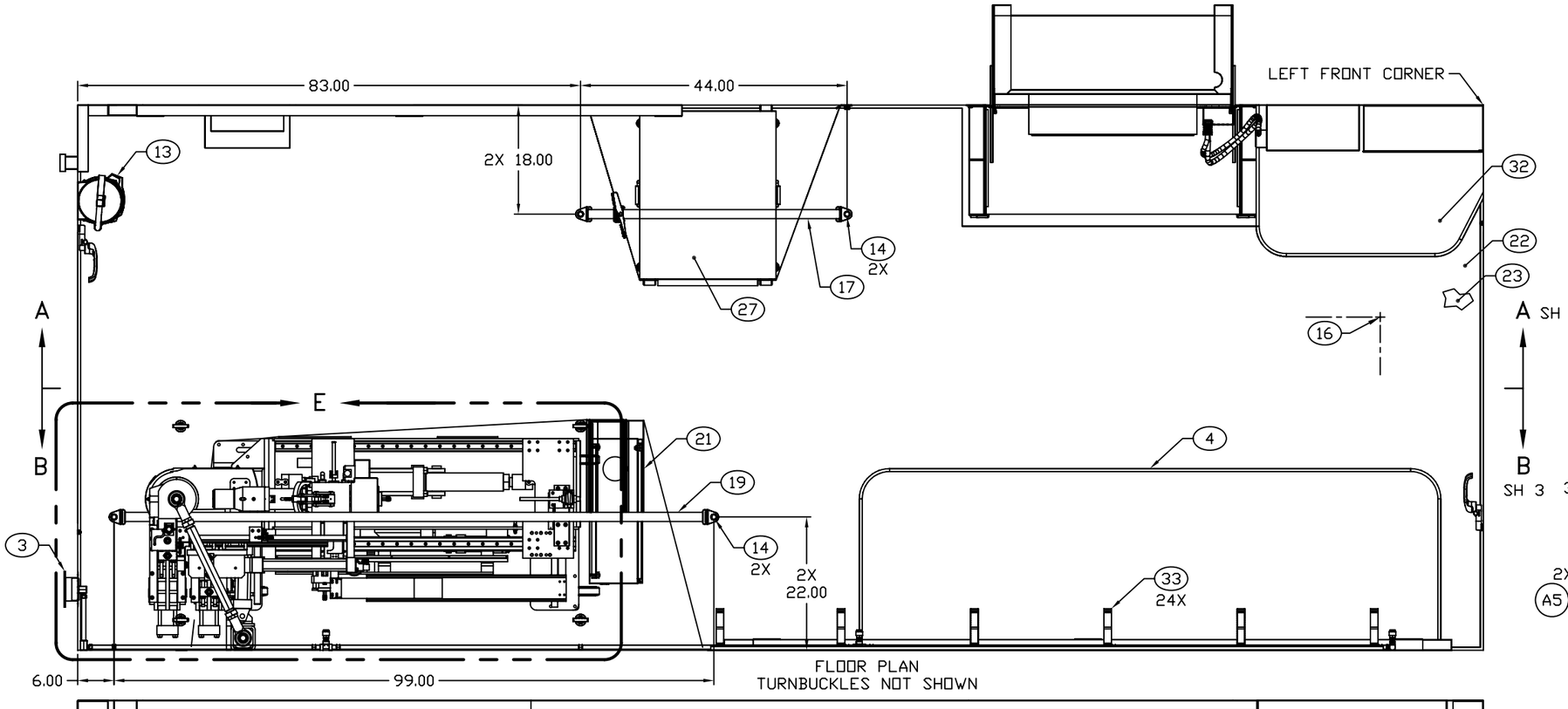

FLOOR PLAN
TURNBUCKLES NOT SHOWN

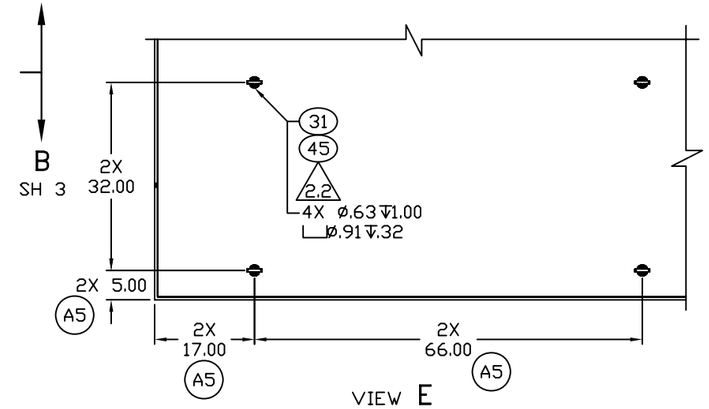

VIEW E
TUBE BENDER, AIR LINE, AND STRAPS NOT SHOWN
SCALE 1/13

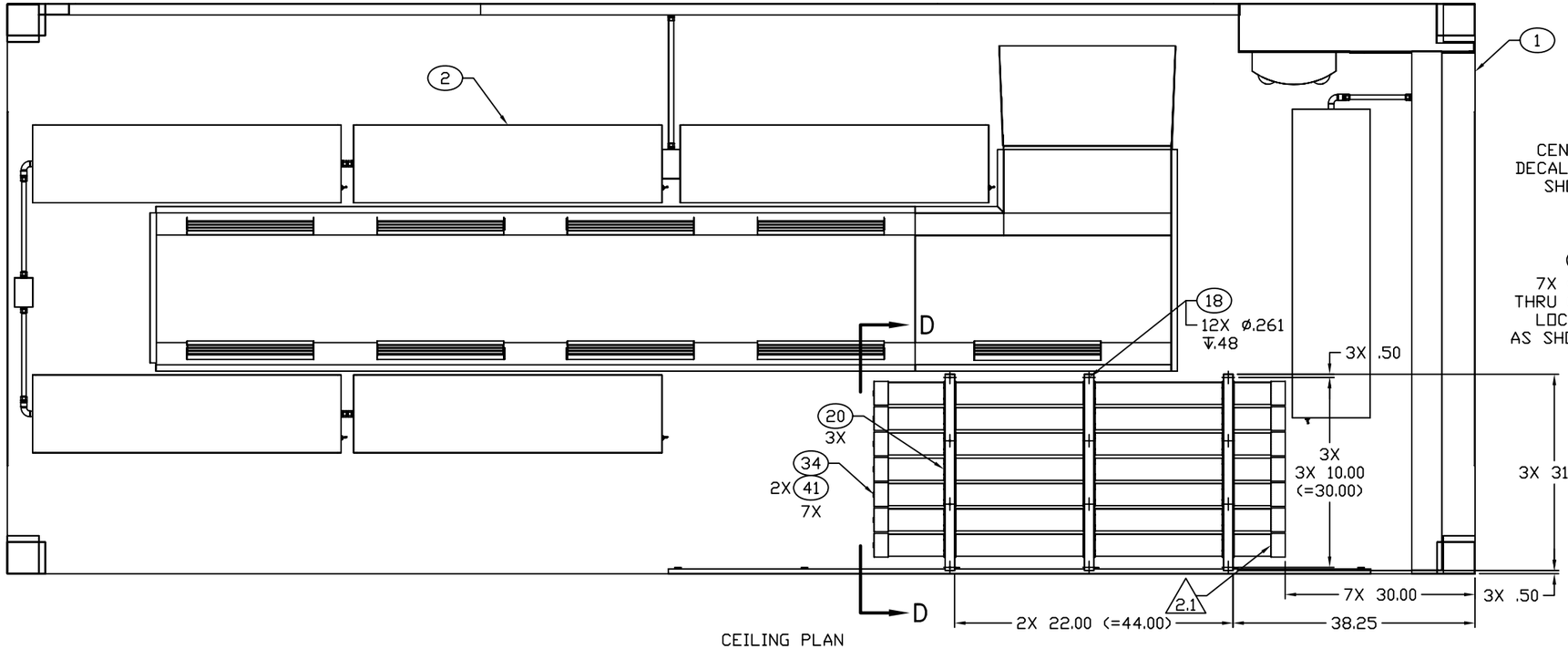

CEILING PLAN

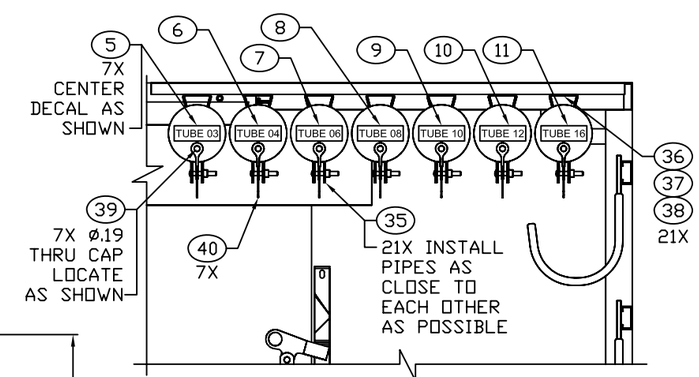

SECTION D–D
ROTATED 90° CCW
SCALE 1/10

ENGINEER	DATE	DRAWER	DATE	SIZE	CAGE CODE	DRAWING NUMBER	REV
T NGUYEN	06-04-04	TN	06-04-04	D	91145	MFTB020101	A
NEXT ASSEMBLY		CHECKER		SCALE		SHEET	
FINAL		MAB	06-04-04	1/11		2	

REVISION HISTORY			
REV	DESCRIPTION	DATE	APPROVAL
A	REVISED AND PARTIALLY REDRAWN BY T H NGUYEN. TIE DOWN RINGS REDRAWN.	06-10-19	R VOTAW

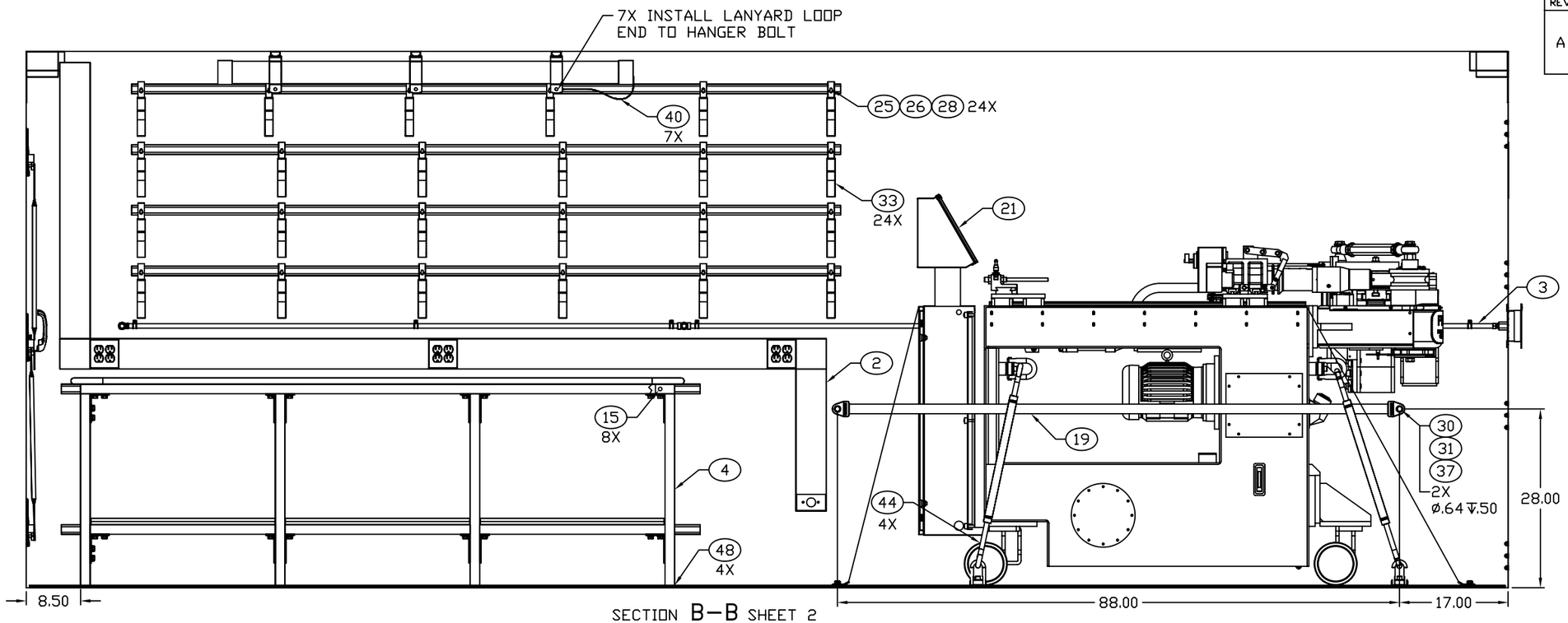

SECTION B–B SHEET 2
ROTATED 180°
CEILING LIGHTS NOT SHOWN

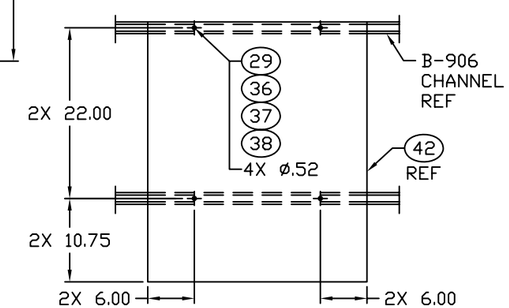

VIEW C
DRAWERS, HINGE LOCK BAR, AND COUNTERTOP NOT SHOWN

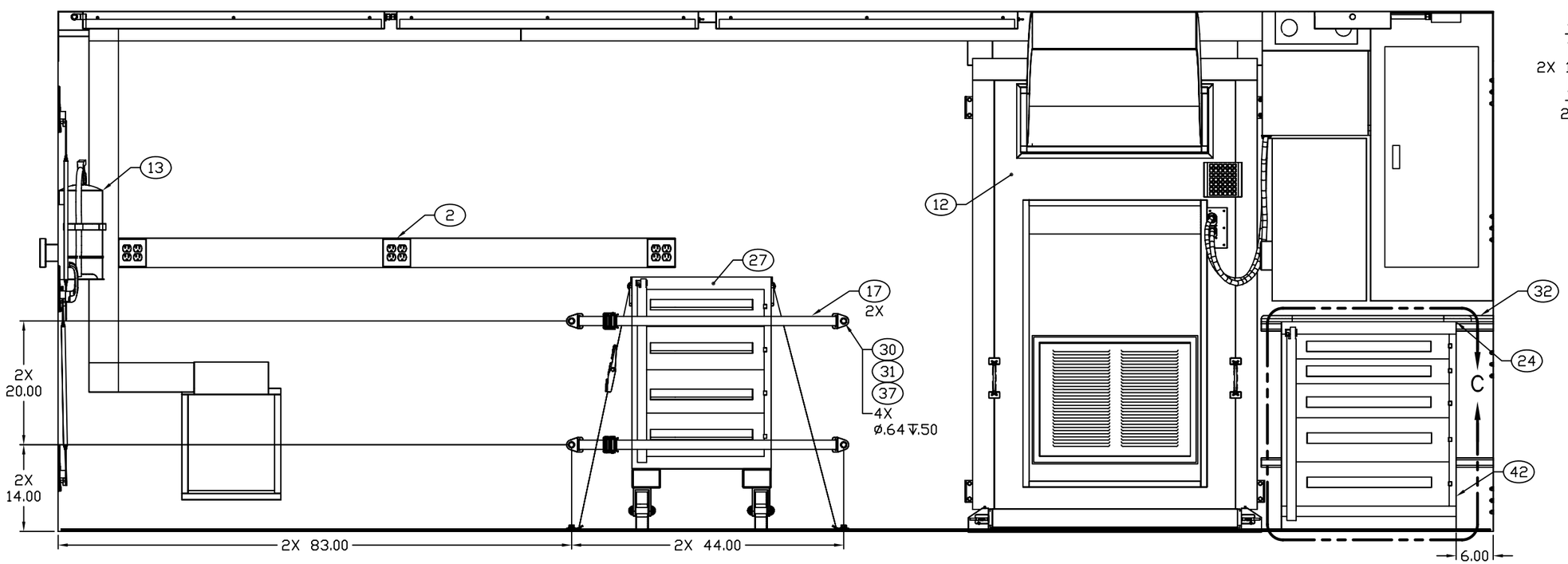

SECTION A–A SHEET 2

ENGINEER	DATE	DRAWER	DATE	SIZE	CAGE CODE	DRAWING NUMBER	REV
T NGUYEN	06-04-04	TN	06-04-04	D	91145	MFTB020101	A
NEXT ASSEMBLY		CHECKER		SCALE		SHEET	
FINAL		MAB	06-04-04	1/10		3	