REVISION HISTORY			
REV	DESCRIPTION	DATE	APPROVAL
A	REVISED AND PARTIALLY REDRAWN BY M. BEUSTER. (1) NOTE CHANGED. (3) FILE NAME DELETED. (4) ITEM ADDED. (5) ITEM DELETED.	2004-09-03	R A VOTAW

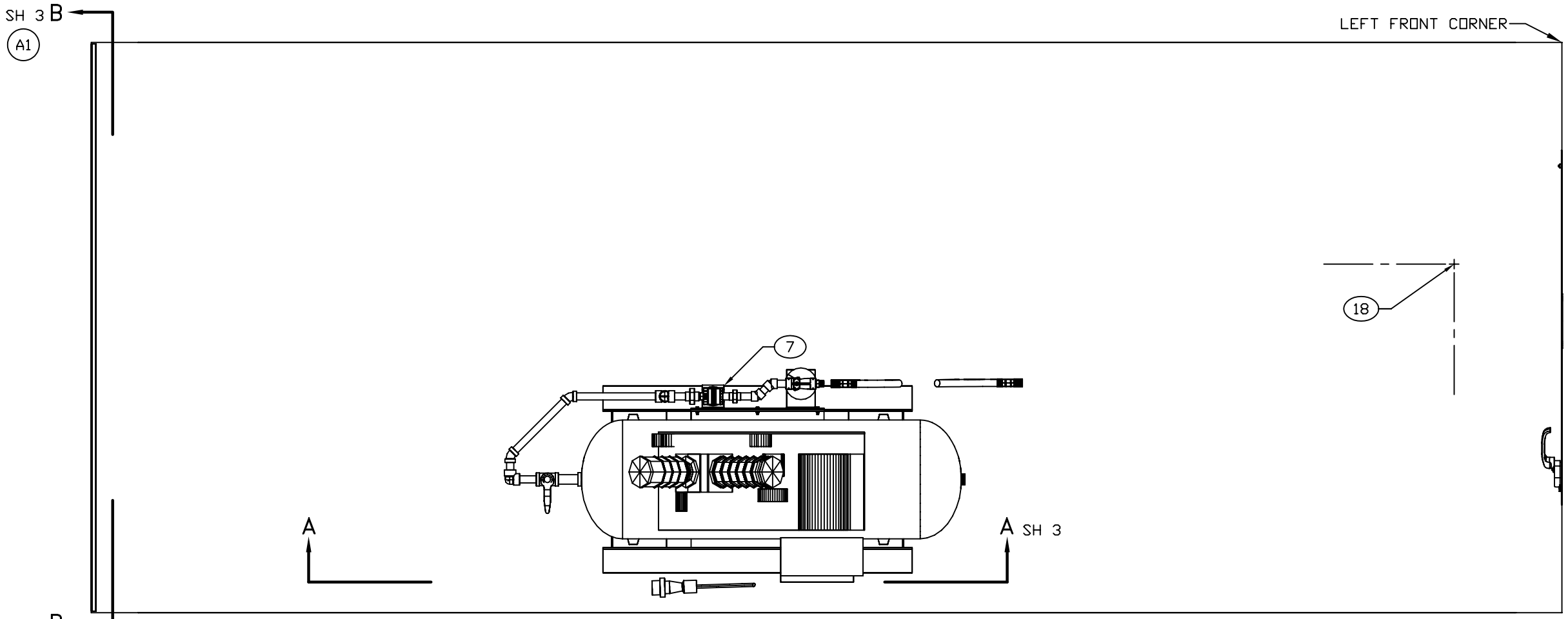

FLOOR PLAN

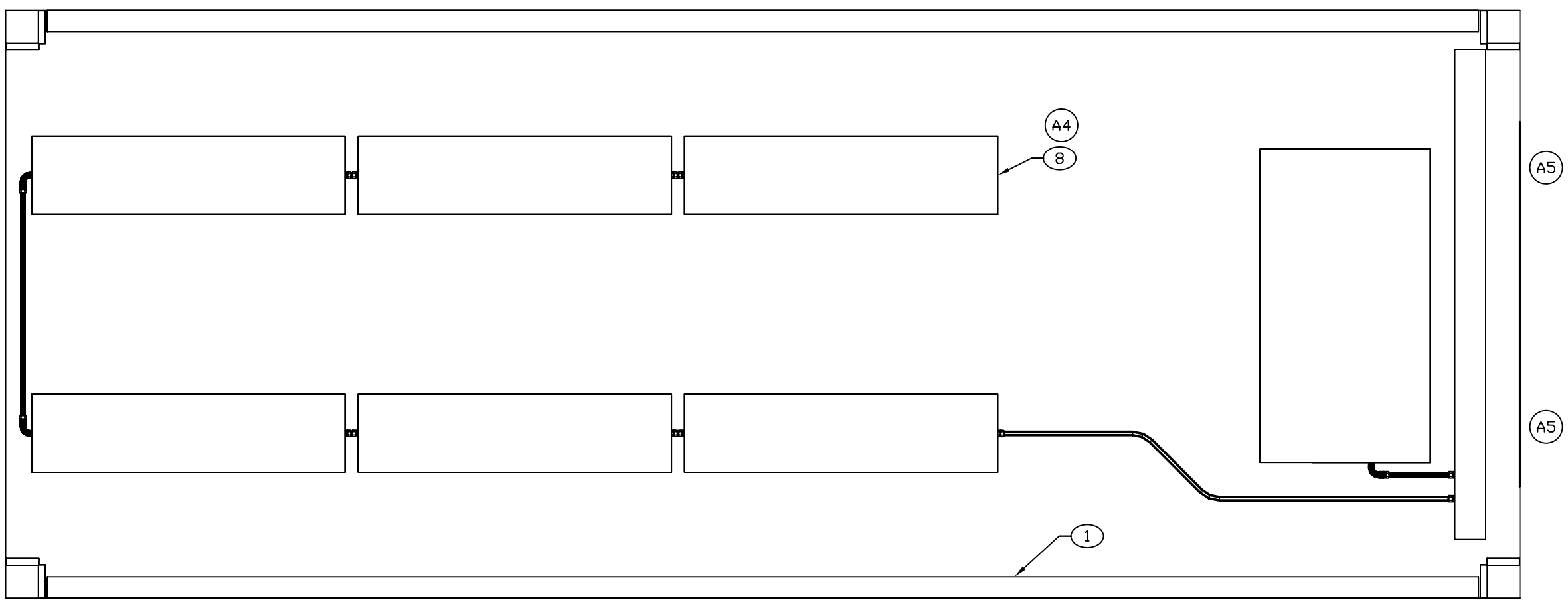

CEILING PLAN

ENGINEER	DATE	DRAWER	DATE	SIZE	CAGE CODE	DRAWING NUMBER	REV
M. A. BEUSTER	1995-03-22	MAB	1995-03-22	D	91145	MFSE030101	A
NEXT ASSEMBLY		CHECKER		SCALE 1/10		SHEET 2	
FINAL		RV	1995-12				

A3

REVISION HISTORY			
REV	DESCRIPTION	DATE	APPROVAL
A	REVISED AND PARTIALLY REDRAWN BY M. BEUSTER. (3) FILE NAME DELETED. (7) SECTION MOVED FROM SHEET 4.	2004-09-03	R A VOTAW

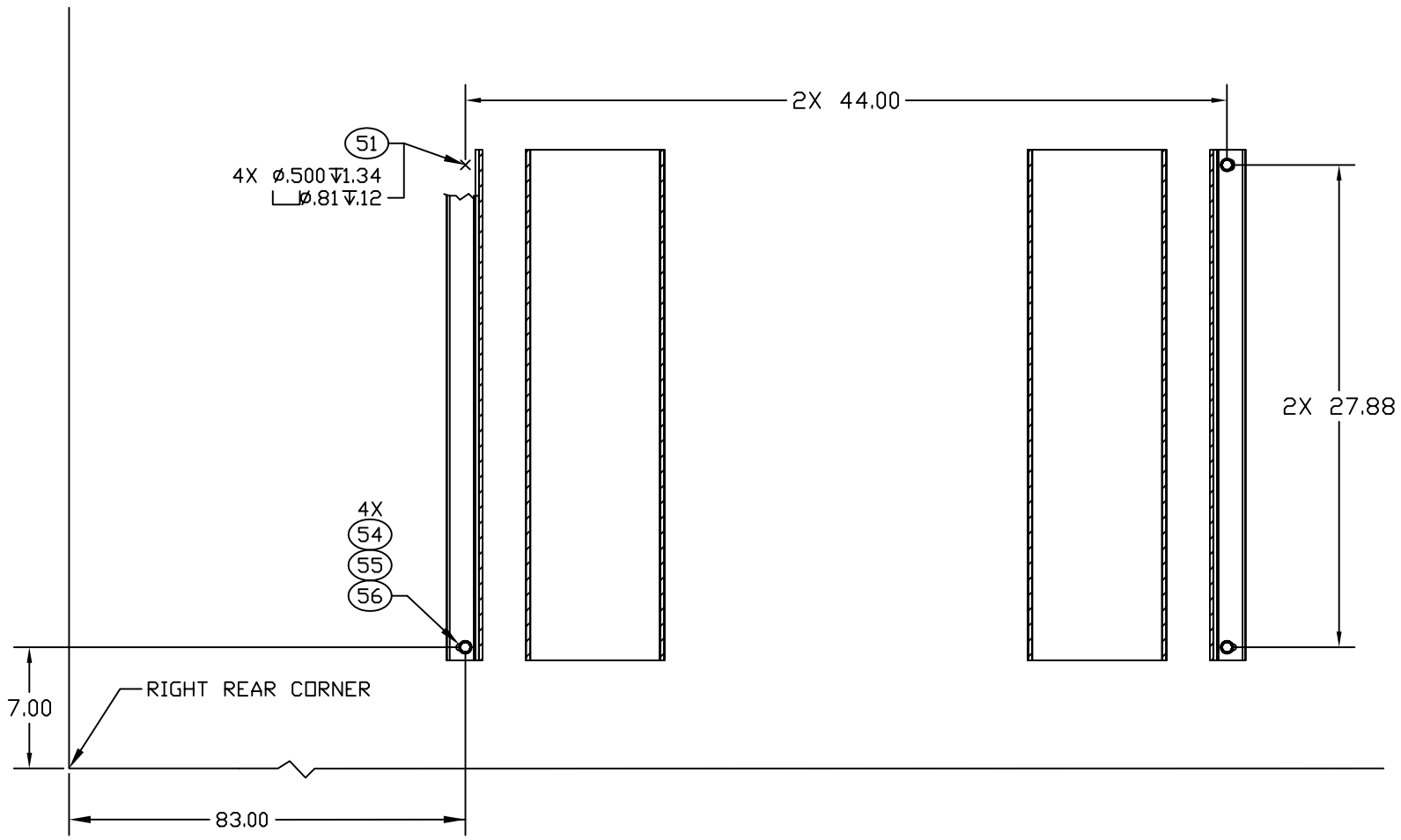

SECTION C–C
SCALE 1/5

CHANNEL FASTENERS LEGEND

SYMBOL	FIND NO	LOCATION
×	53	THRU STUD
+	-	NOT THRU STUD

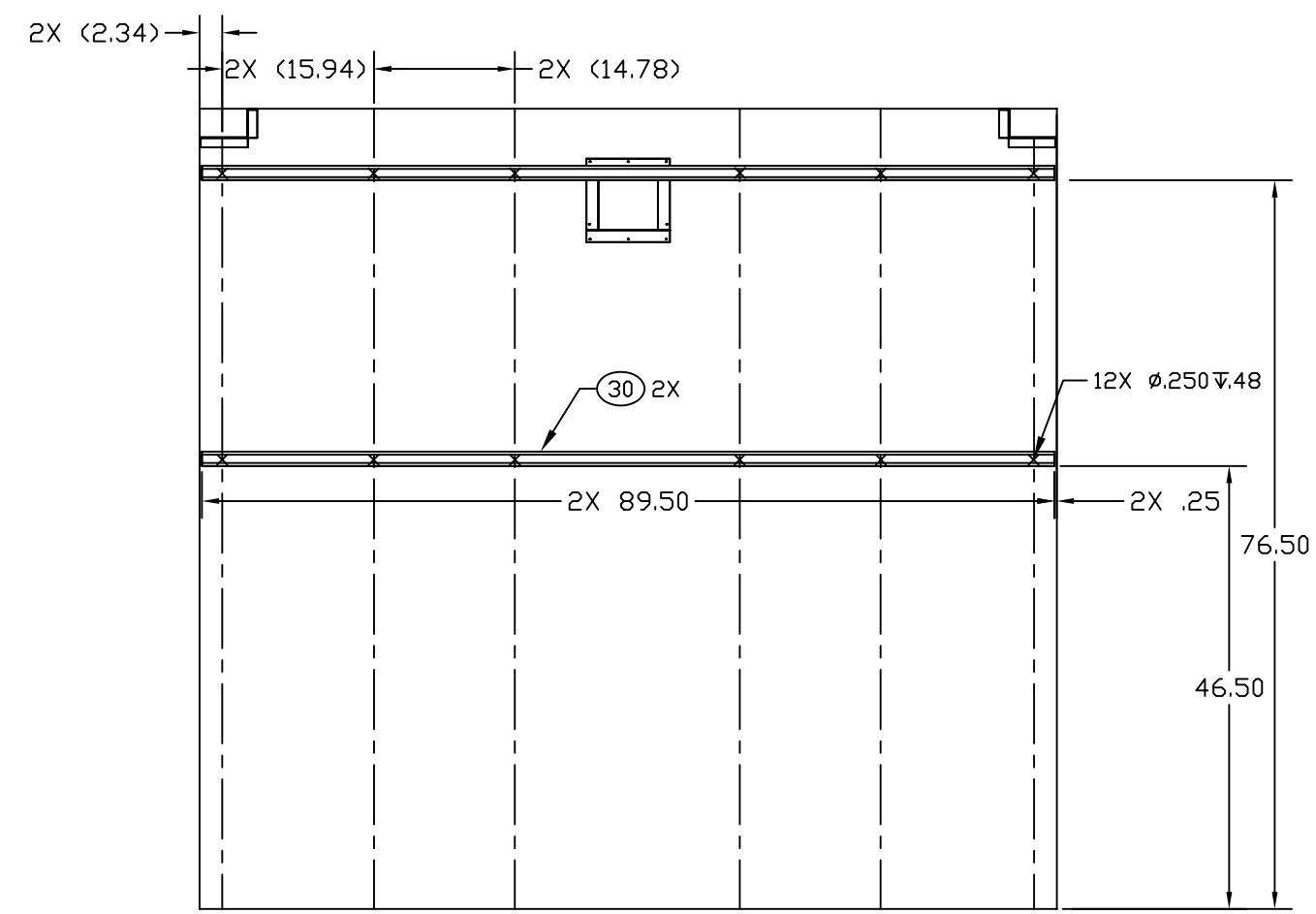

SECTION B–B SH 2
ROTATED 90° CW

A7

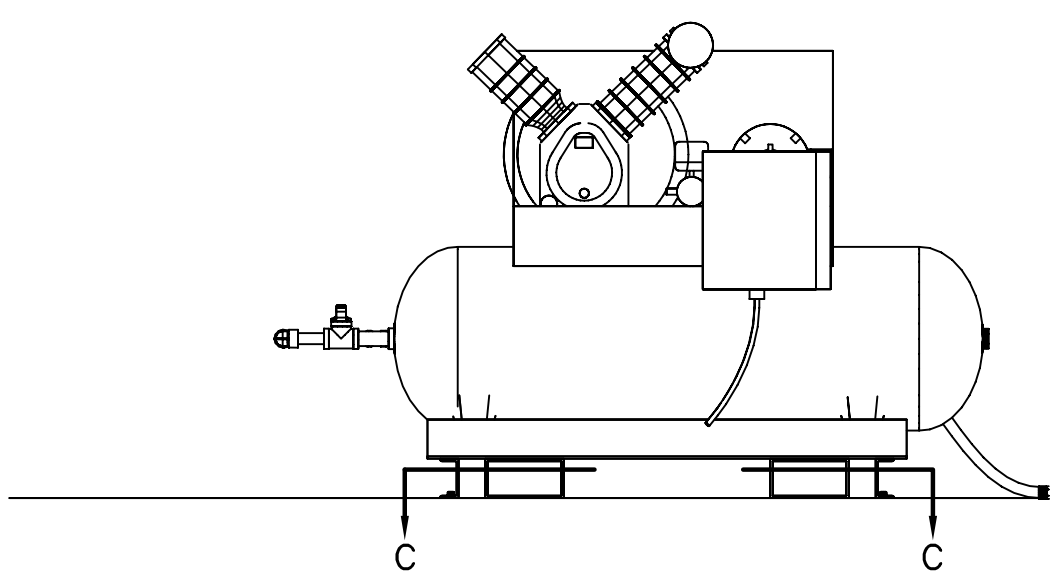

VIEW A–A SH 2

A3

ENGINEER	DATE	DRAWER	DATE	SIZE	CAGE CODE	DRAWING NUMBER	REV
M. A. BEUSTER	1995-03-22	MAB	1995-03-22	D	91145	MF SE030101	A
NEXT ASSEMBLY		CHECKER		SCALE 1/10		SHEET 3	
FINAL		RV	1995-12				