REVISION HISTORY			
REV	DESCRIPTION	DATE	APPROVAL
A	REVISED AND PARTIALLY REDRAWN BY T H NGUYEN. (1) ITEM ADDED.	05-12-16	R VOTAW

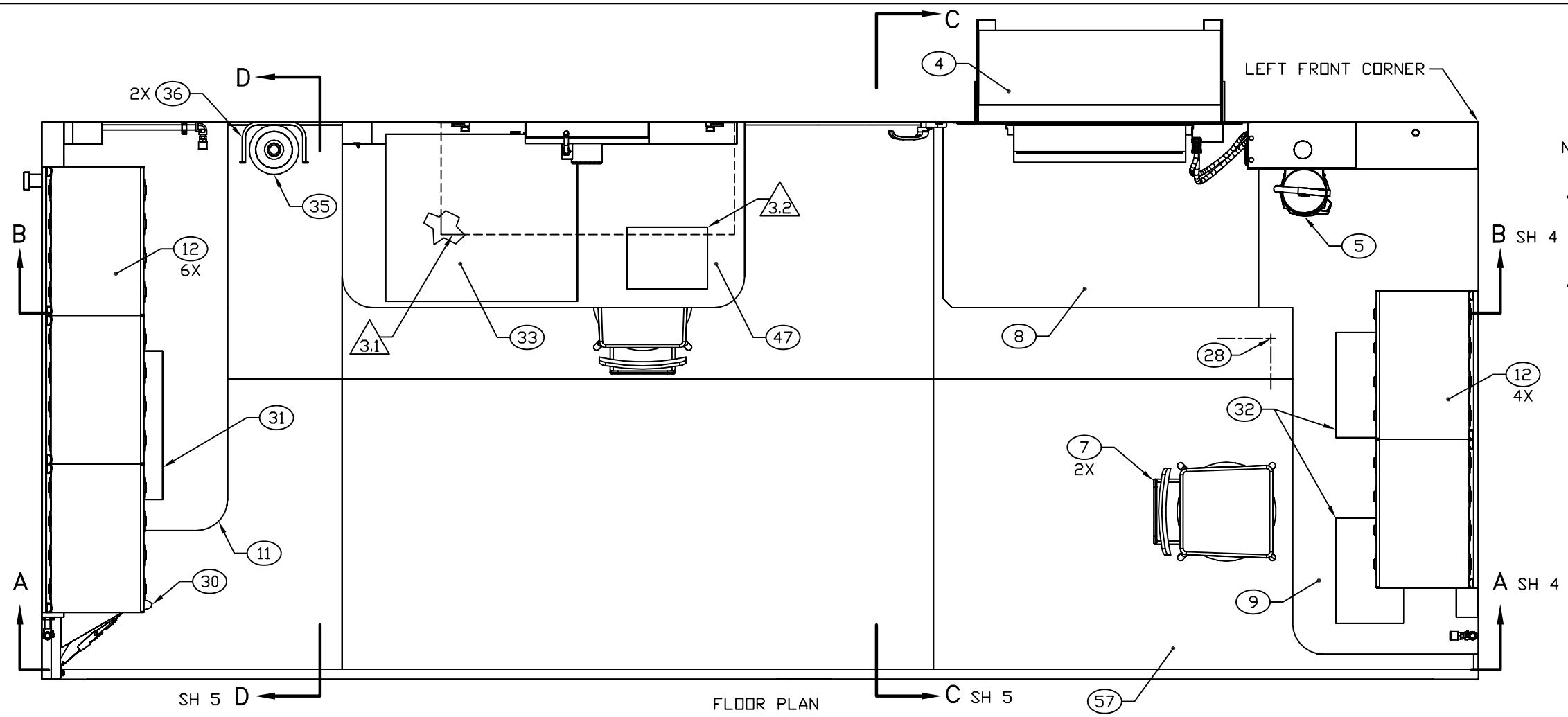

FLOOR PLAN

NOTES:

3.1 REMOVE AIR CONDITIONER SLIDE ASSY, FILL HOLE WITH LOOSE FIND NO 56 BEFORE INSTALLING FLOOR PLATES, FIND NO 57.

3.2 THIS ITEM IS PART OF FIND NO 33.

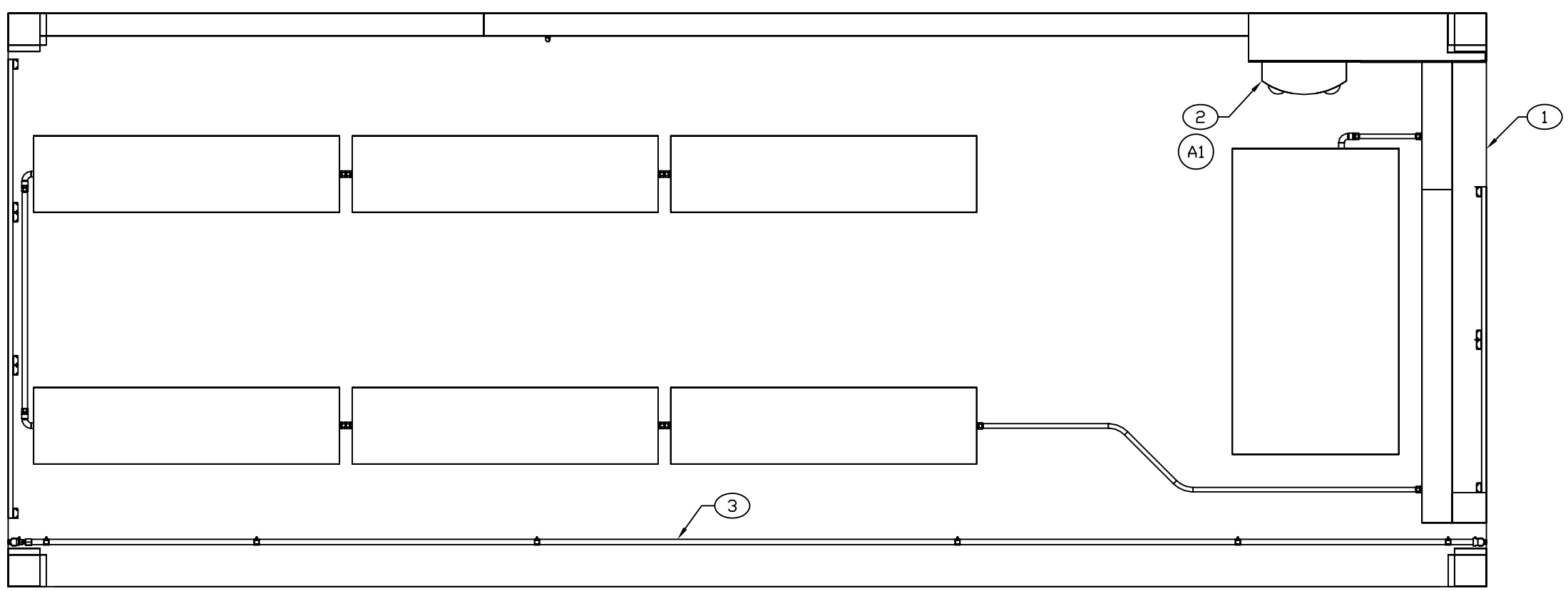

CEILING PLAN

ENGINEER	DATE	DRAWER	DATE	SIZE	CAGE CODE	DRAWING NUMBER	REV
T NGUYEN	03-03-31	TN	03-03-31	D	91145	MFRR050101	A
NEXT ASSEMBLY		CHECKER		SCALE		SHEET	
FINAL		MAB	03-03-31	1/11		3	

REVISION HISTORY			
REV	DESCRIPTION	DATE	APPROVAL
A	REVISED AND PARTIALLY REDRAWN BY T H NGUYEN. (1) ITEM ADDED. (6) NOTE CHANGED.	05-12-16	R VOTAW

NOTES:

A6

4.1 CENTER FAN AND SPACER ASSY ON CUTOUT.

4.2 THIS ITEM IS PART OF FIND NO 33.

4.3 DIMENSION IS FROM TOP OF FLOOR PLATE.

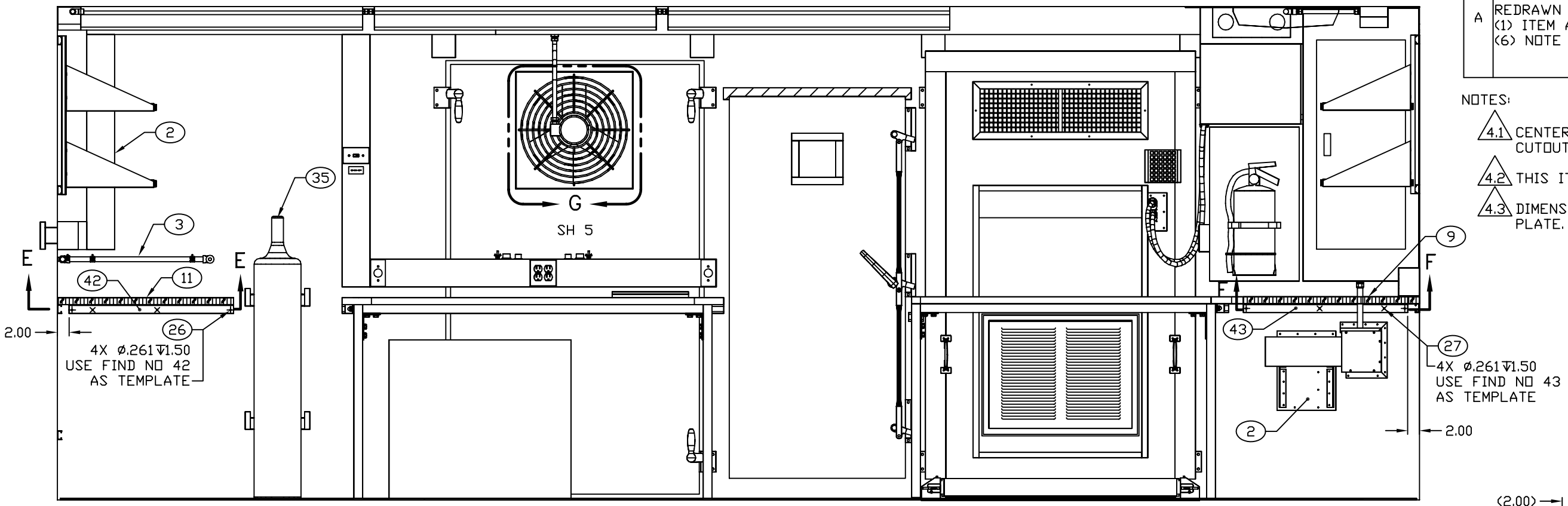

SECTION B–B SH 3

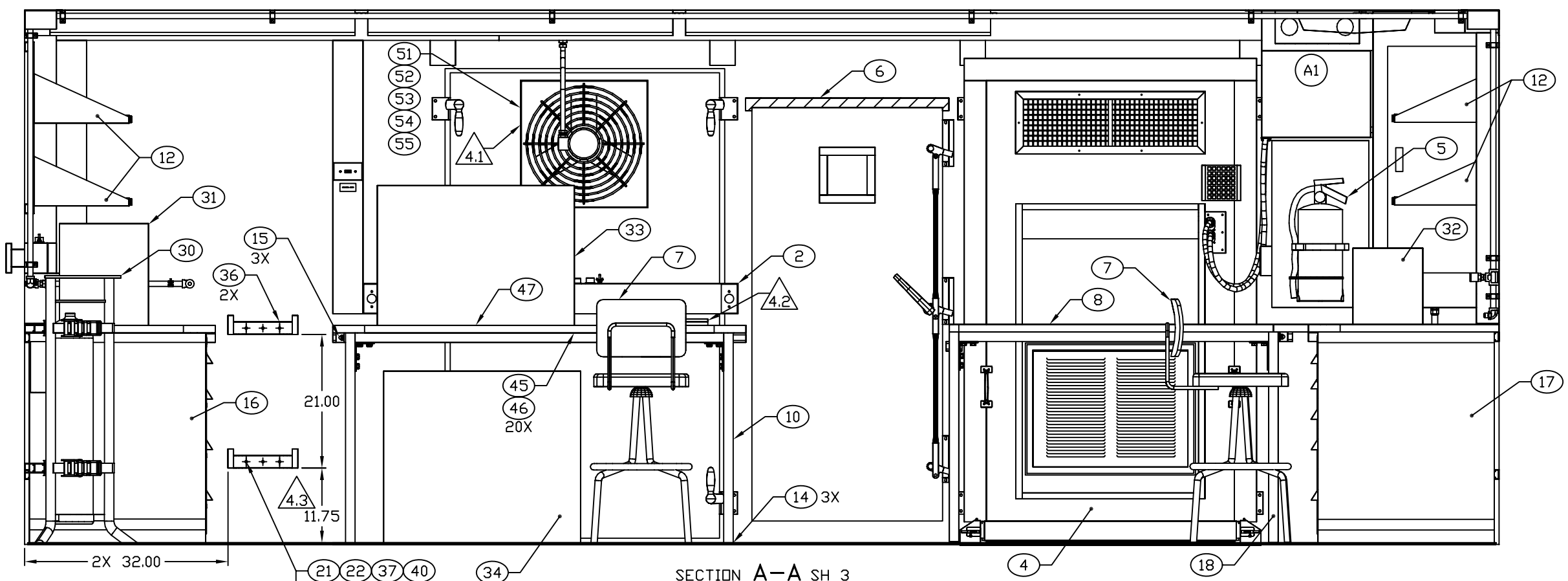

SECTION A–A SH 3
NITROGEN BOTTLE NOT SHOWN

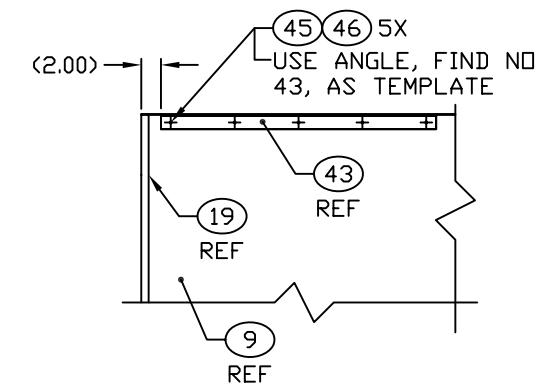

SECTION F–F
ROTATED 180°

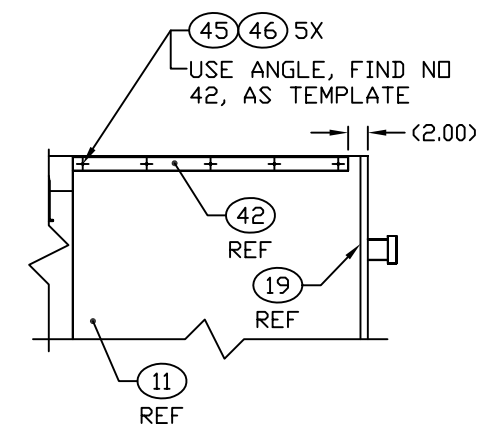

SECTION E–E
ROTATED 180°

ENGINEER	DATE	DRAWER	DATE	SIZE	CAGE CODE	DRAWING NUMBER	REV
T NGUYEN	03-03-31	TN	03-03-31	D	91145	MFRR050101	A
NEXT ASSEMBLY		CHECKER		SCALE		SHEET	
FINAL		MAB	03-03-31	1/10		4	