REVISION HISTORY			
REV	DESCRIPTION	DATE	APPROVAL
A	REVISED AND PARTIALLY REDRAWN BY T H NGUYEN. (1) ITEM ADDED.	06-02-17	R VOTAW

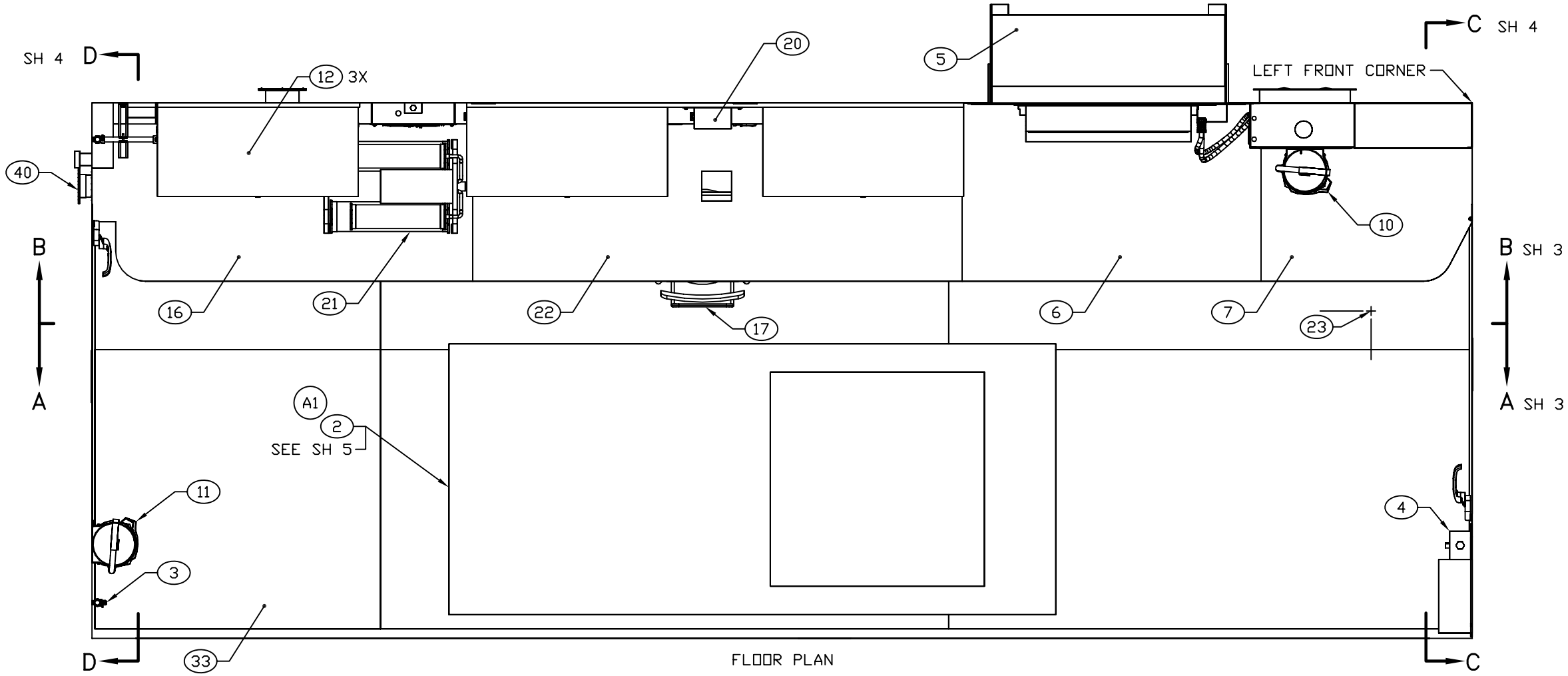

FLOOR PLAN

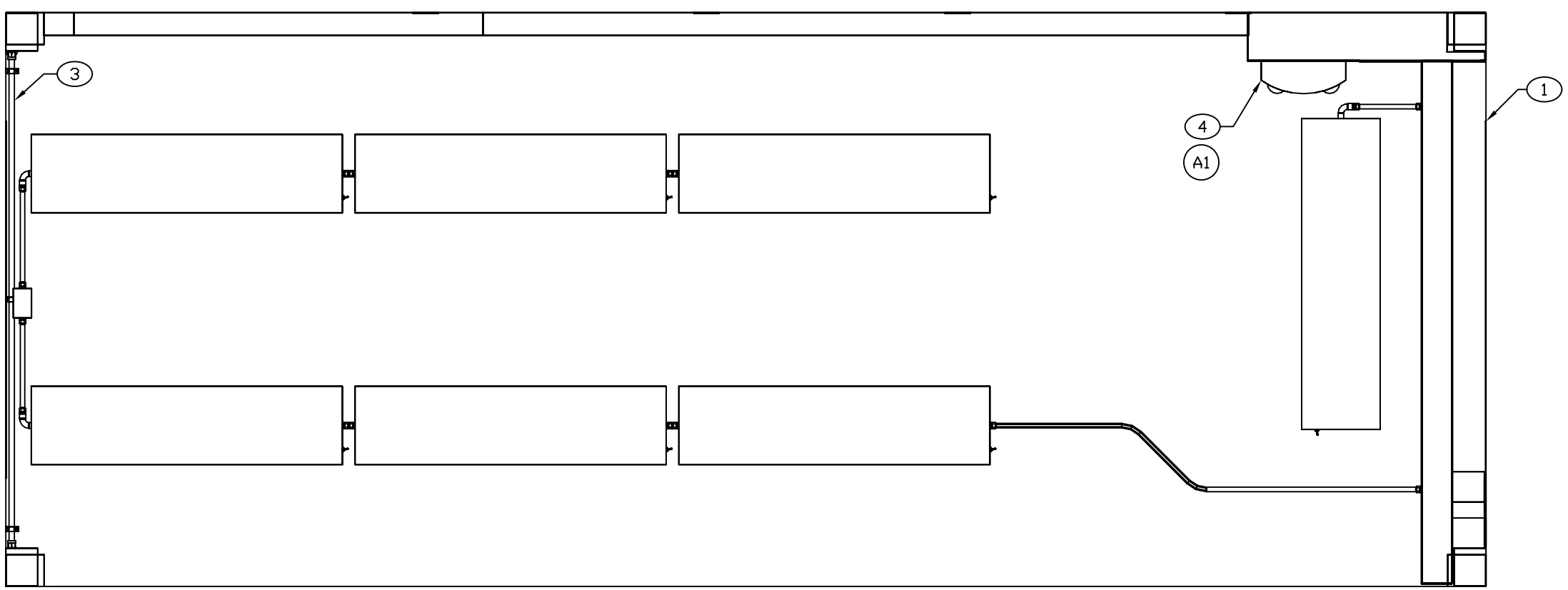

CEILING PLAN

ENGINEER	DATE	DRAWER	DATE	SIZE	CAGE CODE	DRAWING NUMBER	REV
T NGUYEN	03-03-31	TN	03-03-31	D	91145	MFRR040101	A
NEXT ASSEMBLY		CHECKER		SCALE		SHEET	
FINAL		MAB	03-03-31	1/11		2	

REVISION HISTORY			
REV	DESCRIPTION	DATE	APPROVAL
D	REVISED AND PARTIALLY REDRAWN BY T H NGUYEN. (1) AIR LINE INSTALLATION UPDATED.	07-01-09	R VOTAW

NOTE:

3.1 DIMENSION IS FROM TOP OF FLOOR PLATES.

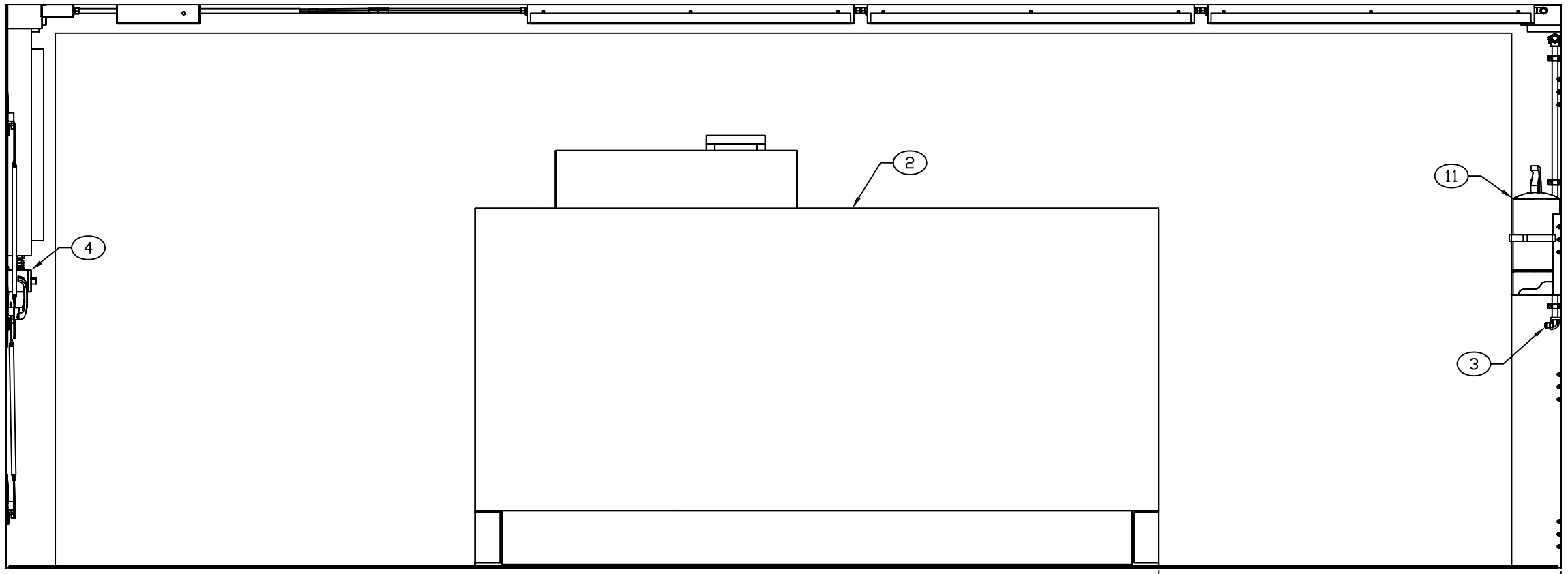

SECTION A–A SH 2
ROTATED 180°

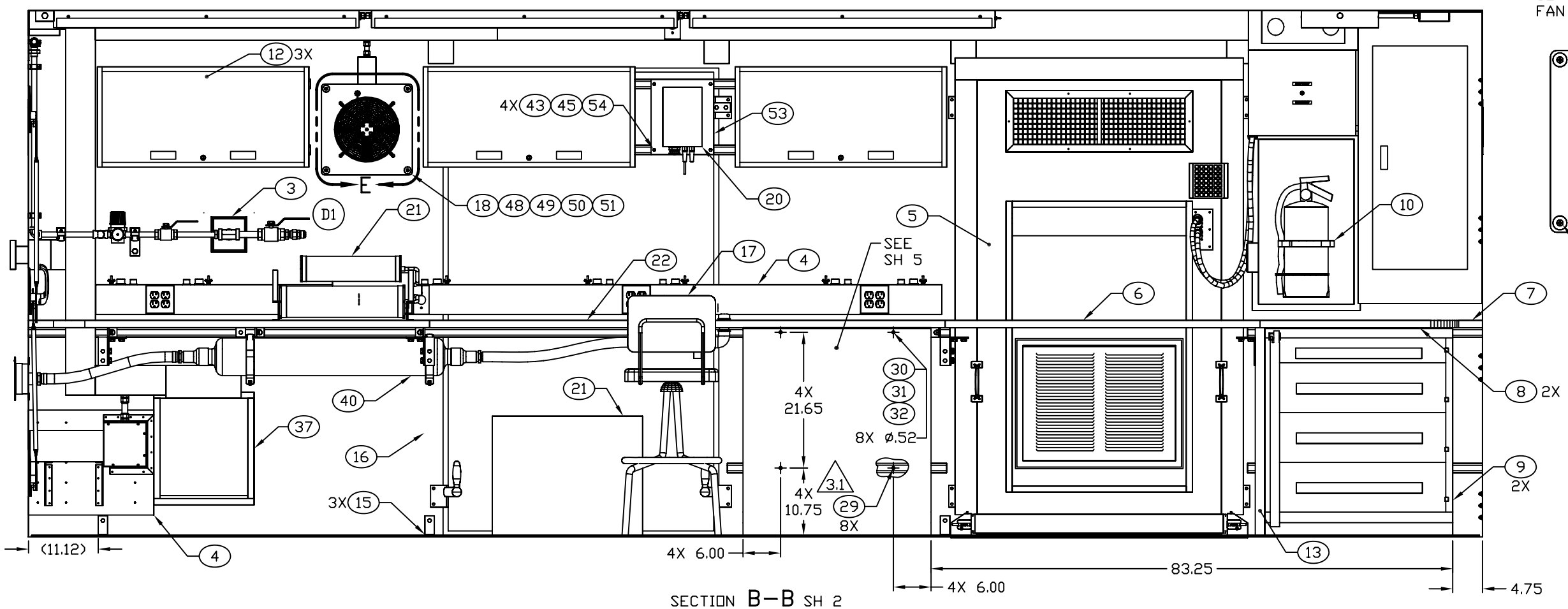

SECTION B–B SH 2
DRAWERS AND HINGE LOCK BAR OF ONE CABINET NOT SHOWN

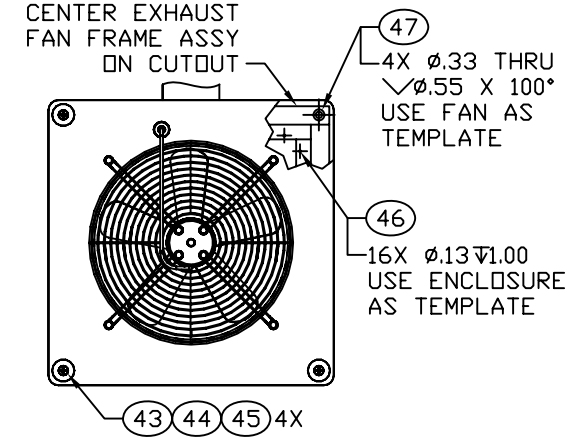

VIEW E
SCALE 1/5

ENGINEER	DATE	DRAWER	DATE	SIZE	CAGE CODE	DRAWING NUMBER	REV
T NGUYEN	03-03-31	TN	03-03-31	D	91145	MFRR040101	D
NEXT ASSEMBLY		CHECKER		SCALE		SHEET	
FINAL		MAB	03-03-31	1/10		3	