REVISIONS			
REV	DESCRIPTION	DATE	APPROVAL
C	DIMENSIONS CHANGED.		

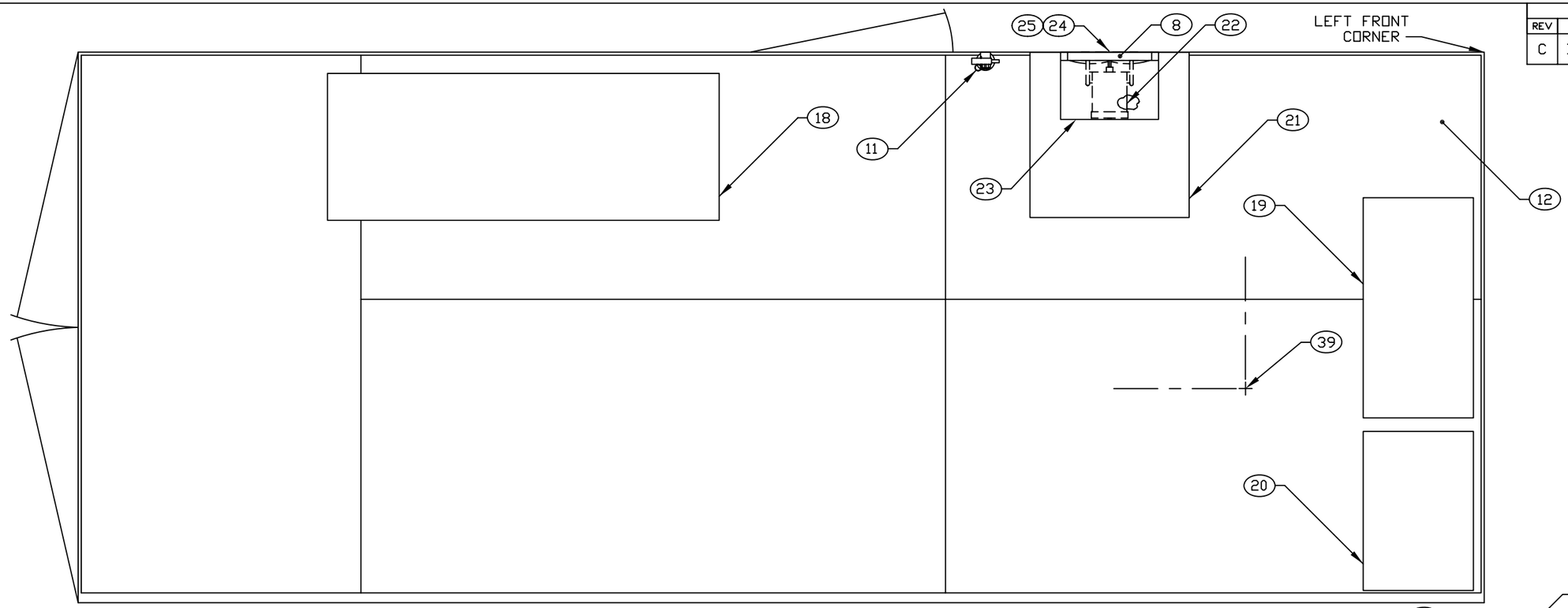

FLOOR PLAN

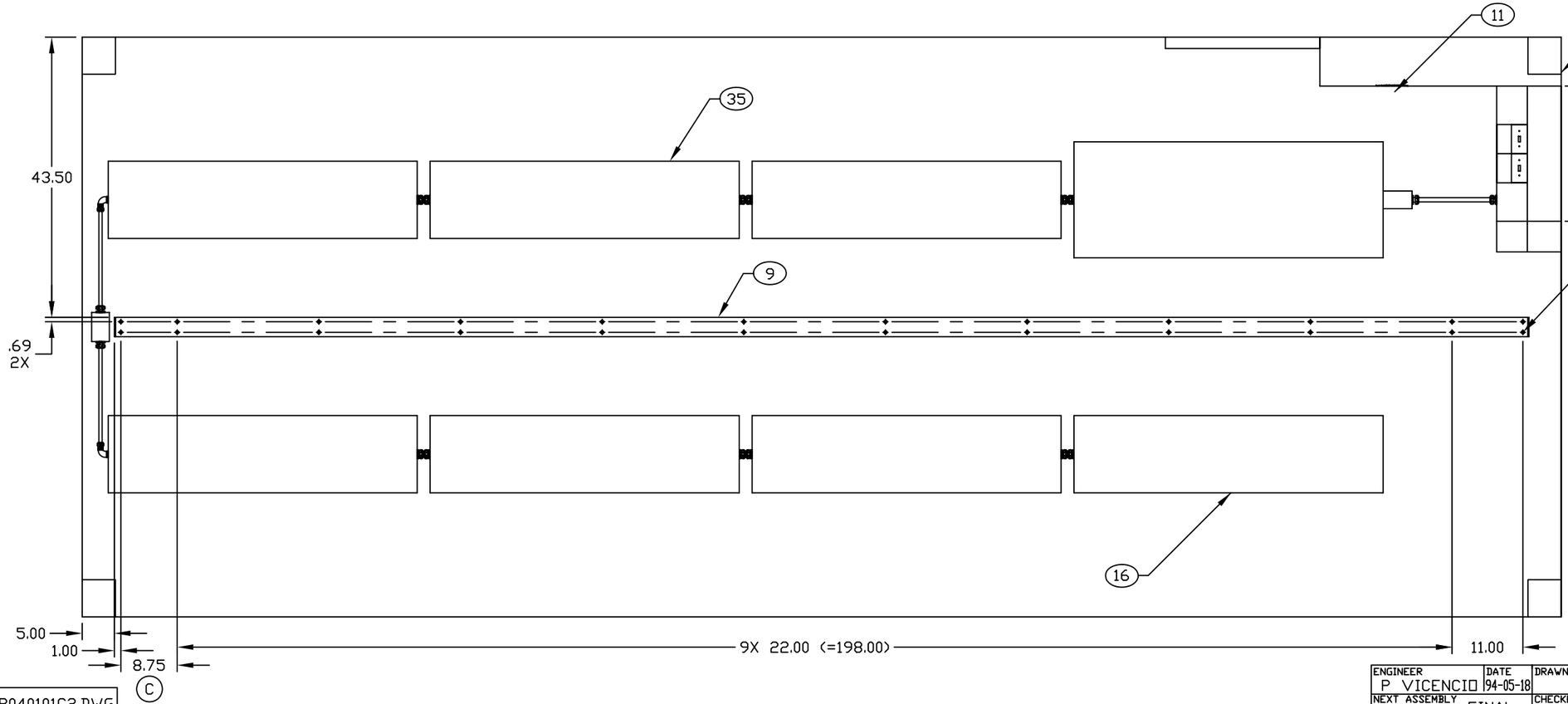

CEILING PLAN

ENGINEER	DATE	DRAWN BY	DATE	SIZE	CAGE CODE	DWG NO	REV
P VICENCIO	94-05-18	PRV	96-11-19	D	91145	MFPP040101	C
NEXT ASSEMBLY		CHECKER		SCALE		SH	
FINAL		A. TUNGCAB	94-06-16	1/10		2	

MFPP040101C2.DWG

REVISIONS			
REV	DESCRIPTION	DATE	APPROVAL
C	(1) FIND NO 13 DELETED. (2) FIND NO 17 ADDED. (3) FIND NO 11 MOVED. (4) NOTE 3.3 ADDED. (5) NOTE 3.2 DELETED.		

NOTES:

3.1 REMOVE LATCHES AT BOTTOM OF PANEL. REPLACE LATCH WITH BRACKET. SECURE WITH EXISTING NUT AND TRIM EXCESS BOLT. USE FIND NO 30, WASHER, AS REQD.

C5

3.3 USE FIND NUMBER 8 AS TEMPLATE TO LOCATE HOLES.

C4

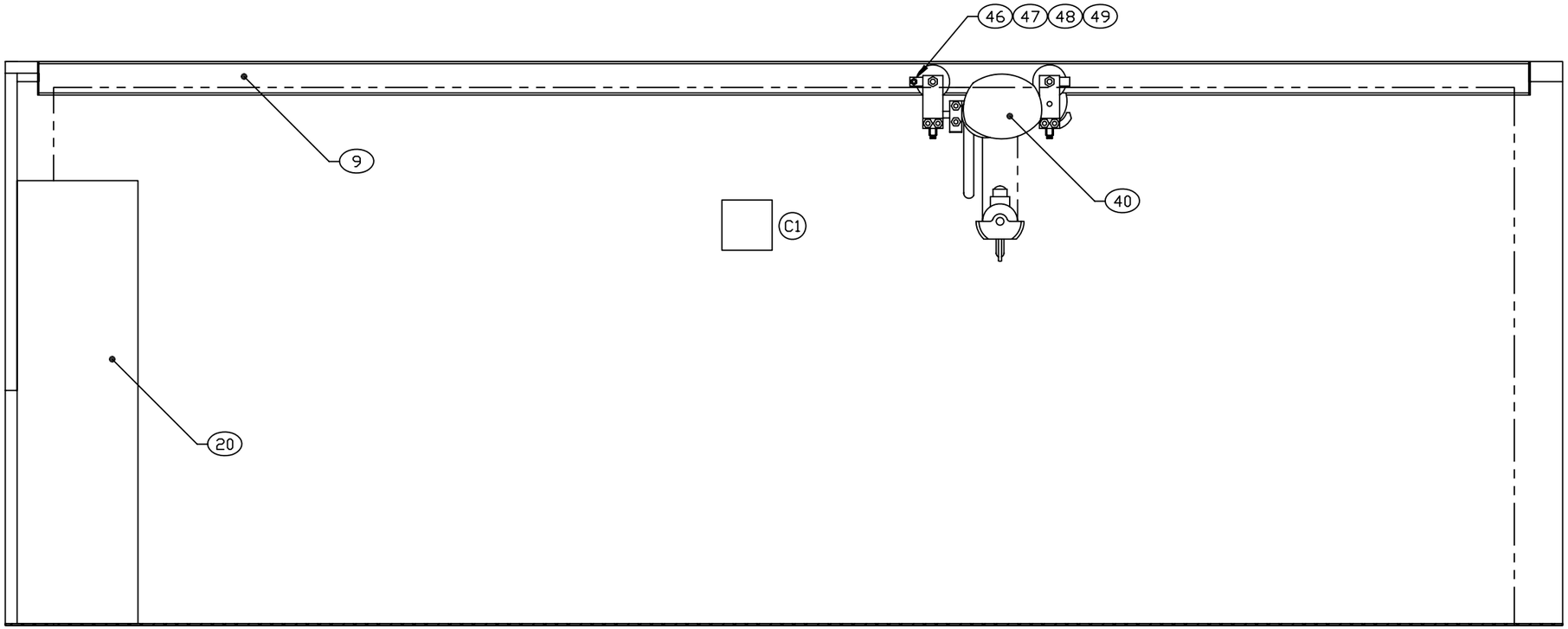

RIGHT WALL

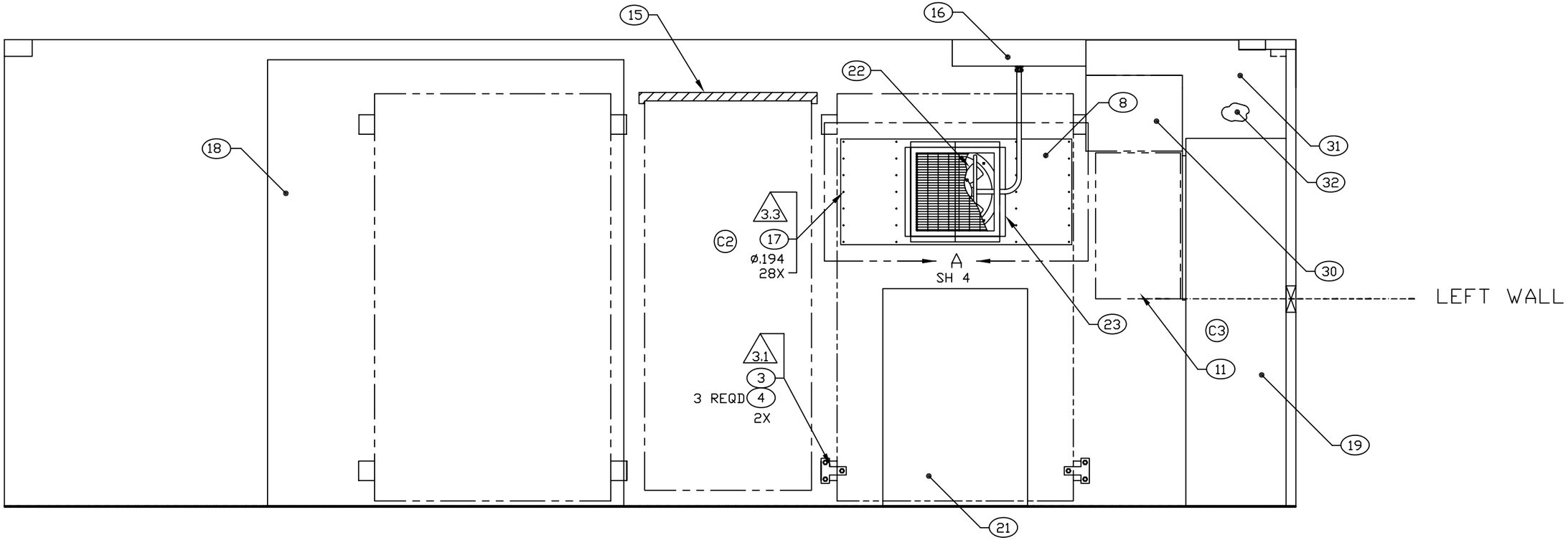

ENGINEER	DATE	DRAWN BY	DATE	SIZE	CAGE CODE	DWG NO	REV
P VICENCIO	94-05-18	PRV	96-11-19	D	91145	MFPP040101	C
NEXT ASSEMBLY FINAL		CHECKER MAB	94-06	SCALE 1/10		SH 3	

MFPP040101C3.DWG