REVISIONS			
REV	DESCRIPTION	DATE	APPROVAL
B	FIND NUMBERS 14, 27, 30, 11, AND 29 RELOCATED.		

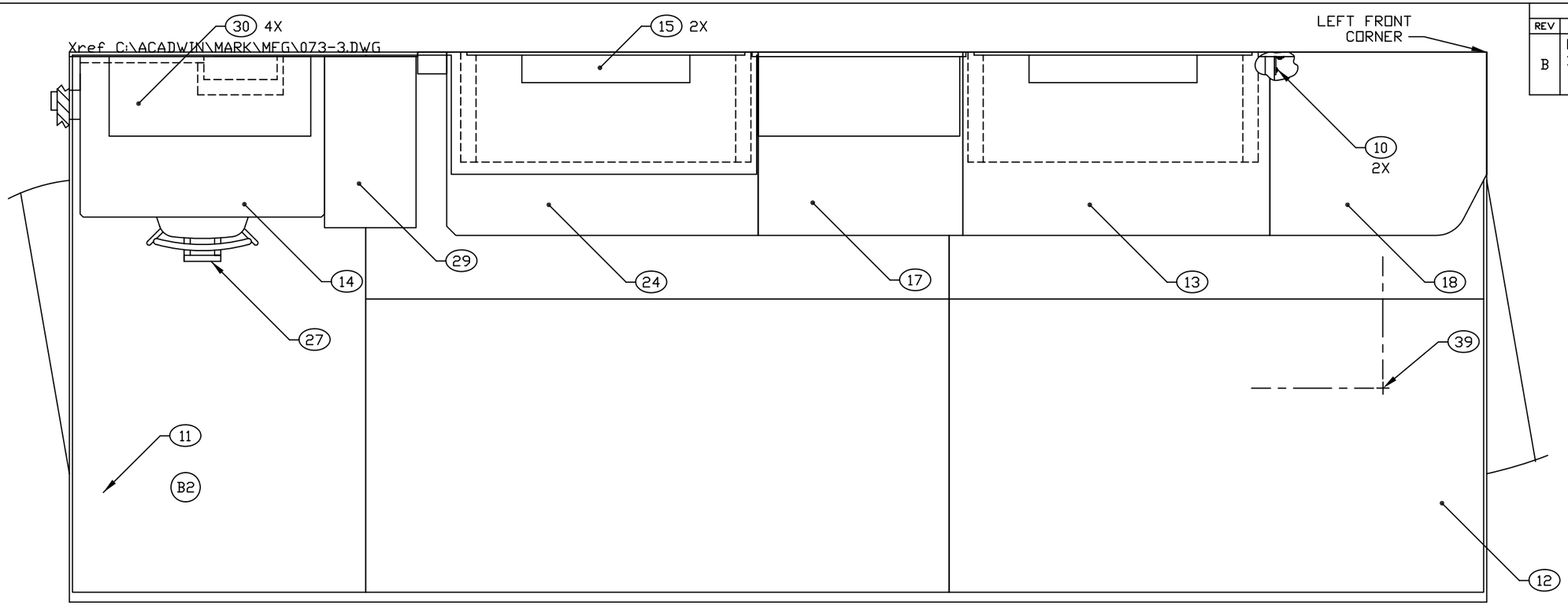

FLOOR PLAN

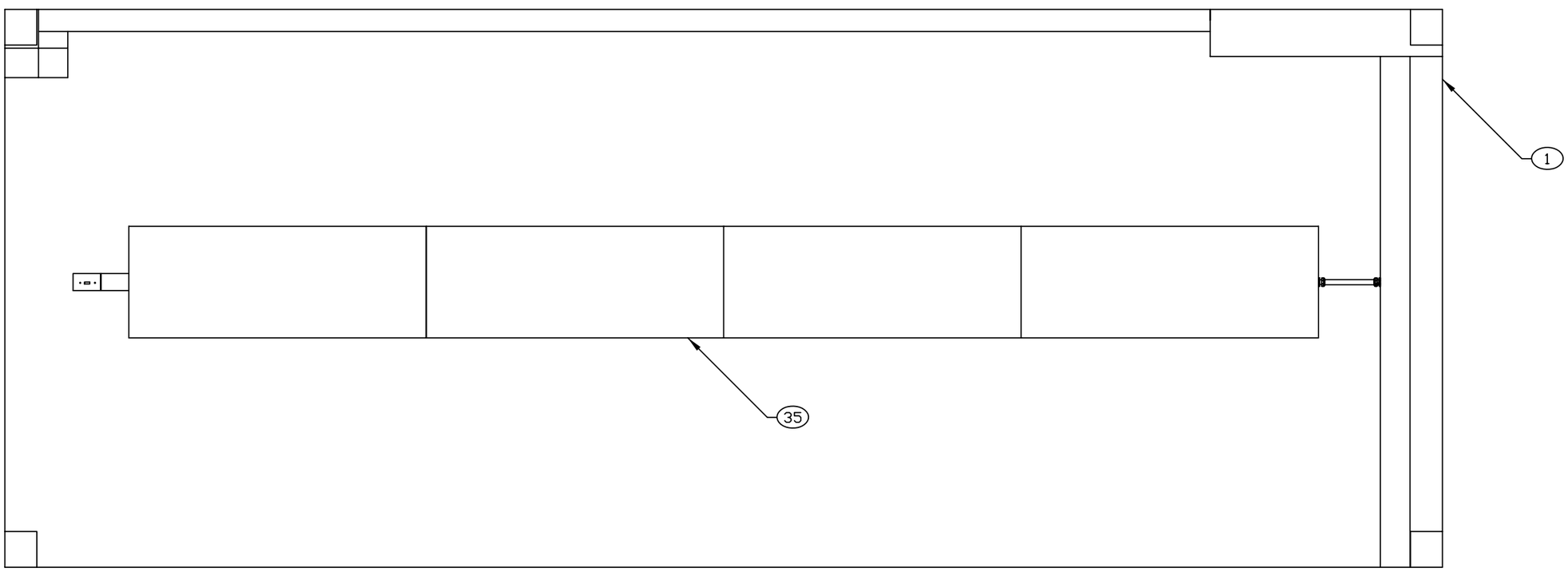

CEILING VIEW

MFPP030101B2.DWG

ENGINEER	DATE	DRAWN BY	DATE	SIZE	CAGE CODE	DWG NO	REV
P. VICENCIO	94-05-11	PRV	96-10-21	D	91145	MFPP030101	B
NEXT ASSEMBLY		CHECKER		SCALE	1/10	SH	2
FINAL		MAB	94-06				

REVISIONS			
REV	DESCRIPTION	DATE	APPROVAL
B	FIND NUMBERS 27, 33, 29, 11, AND 30 RELOCATED.		

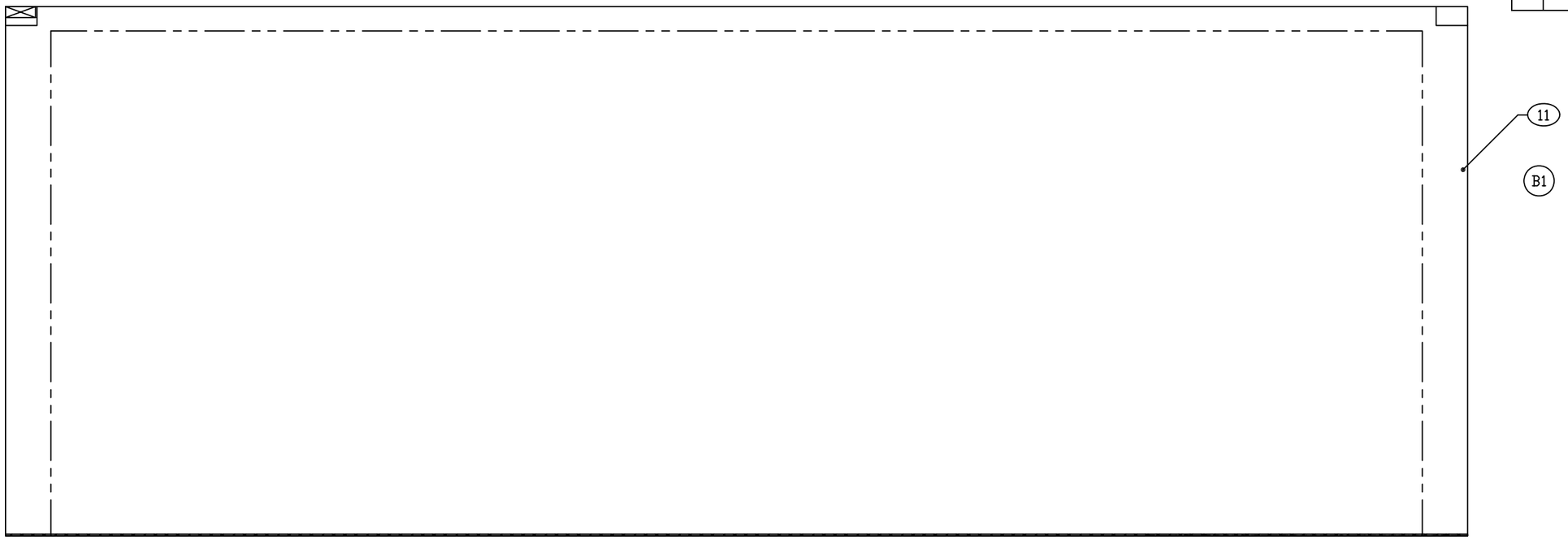

RIGHT WALL

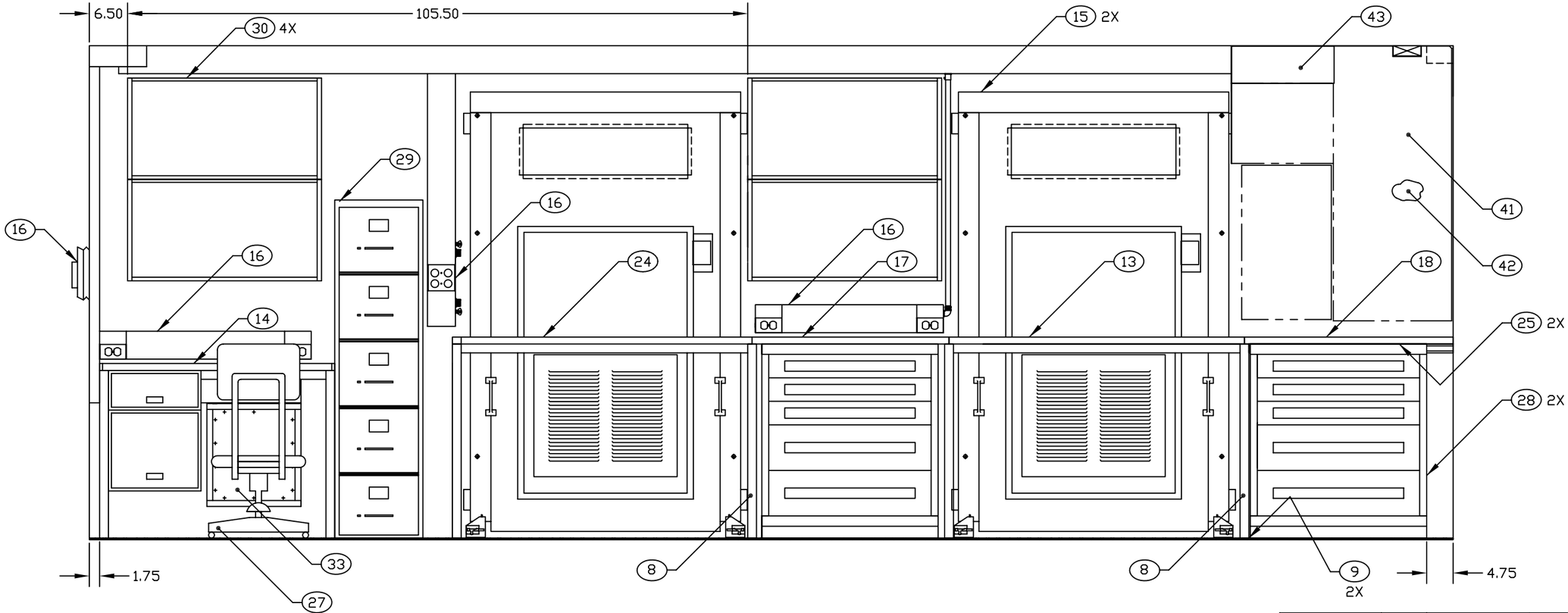

LEFT WALL

ENGINEER	DATE	DRAWN BY	DATE	SIZE	CAGE CODE	DWG NO	REV
P. VICENCIO	94-04-09	PRV	96-10-22	D	91145	MFPP030101	B
NEXT ASSEMBLY FINAL		CHECKER MAB	94-06	SCALE 1/10		SH 3	

MFPP030101B3.DWG