REVISION HISTORY			
REV	DESCRIPTION	DATE	APPROVAL
A	REVISED AND PARTIALLY REDRAWN BY M. BEUSTER. (2) DIMENSION DELETED.	03-01-29	R A VOTAW

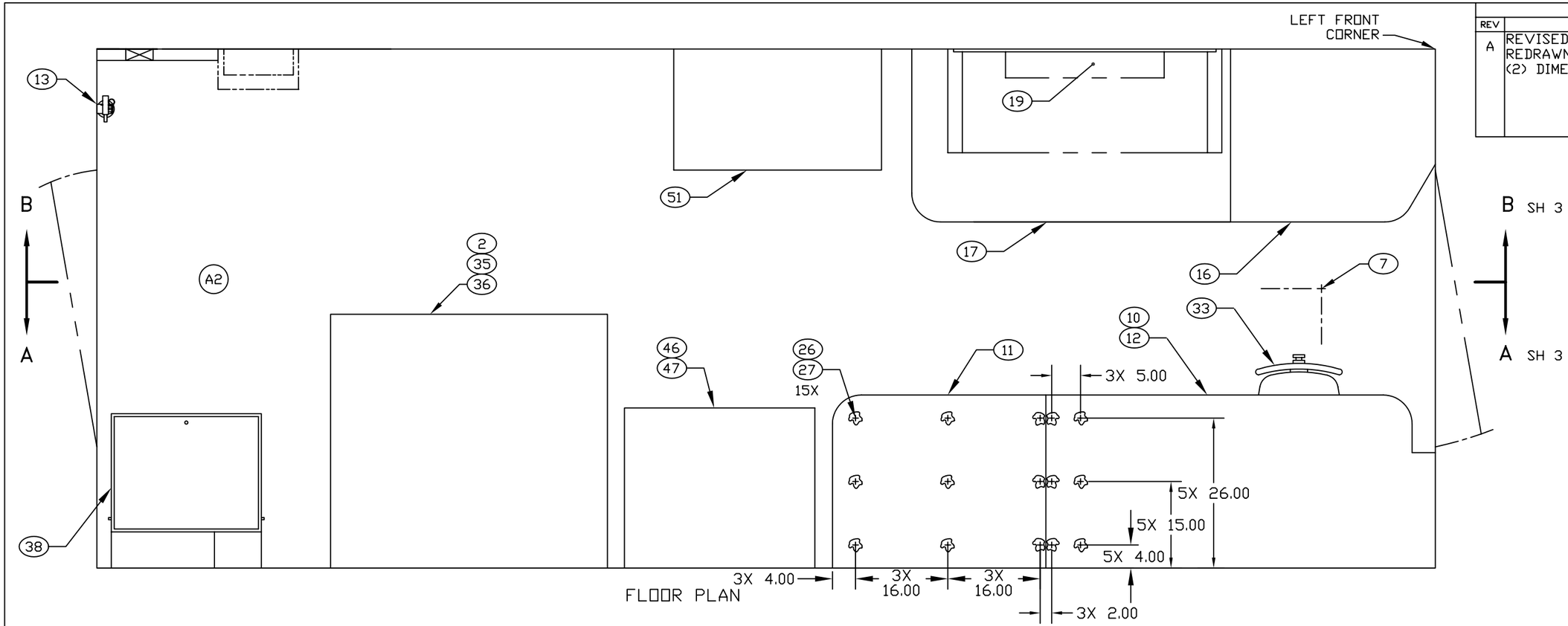

FLOOR PLAN

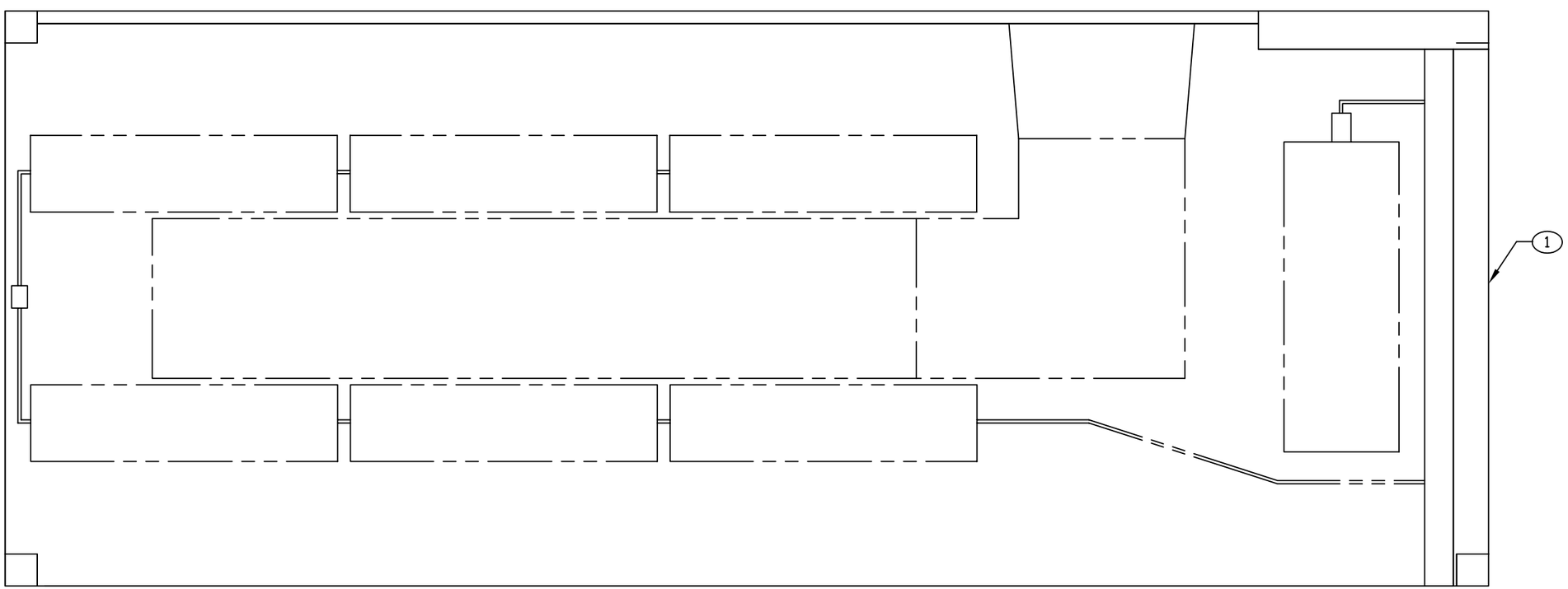

CEILING PLAN

ENGINEER	DATE	DRAWN BY	DATE	SIZE	CAGE CODE	DWG NO	REV
P. PHAN	92-09-18	P. PHAN	92-09-18	D	91145	MFPP010201	A
NEXT ASSEMBLY FINAL		CHECKER MAB	93-03	SCALE 1/10		SH 2	

REVISION HISTORY			
REV	DESCRIPTION	DATE	APPROVAL
B	REVISED AND PARTIALLY REDRAWN BY M. BEUSTER. (4) FIND NUMBERS CHANGED. (5) ITEM MOVED.	03-05-20	R A VOTAW

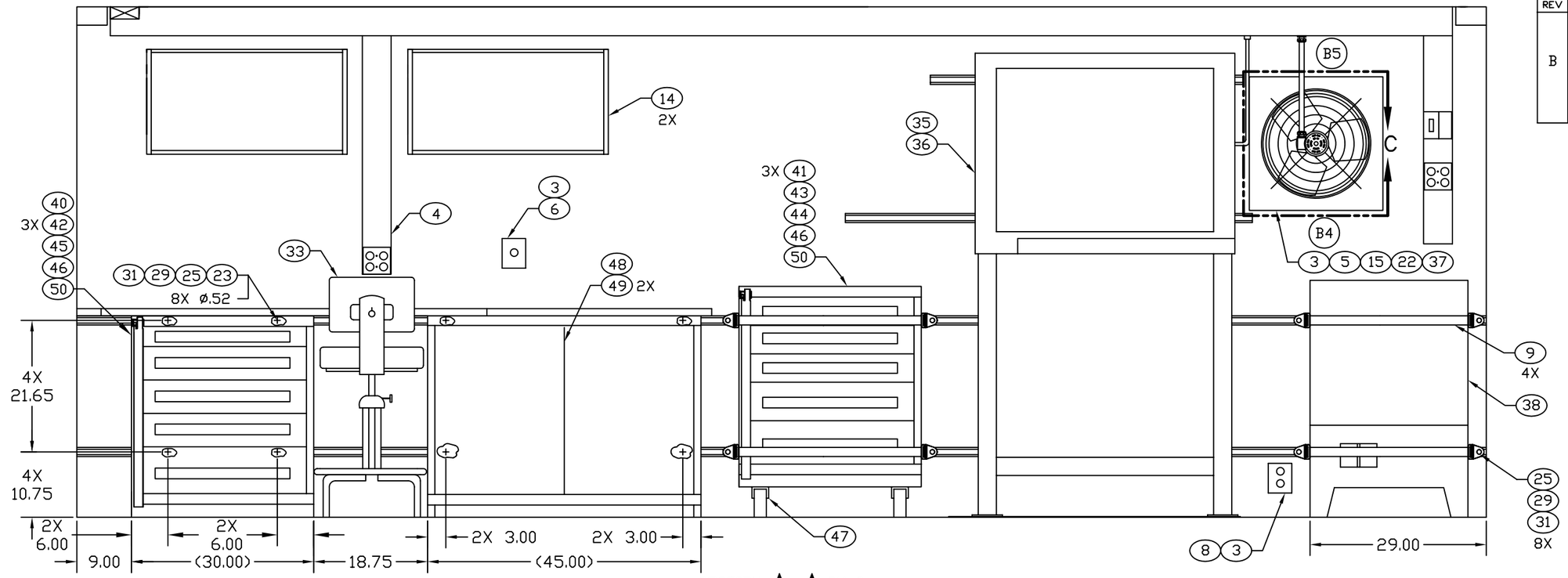

SECTION A–A SH 2
ROTATED 180°

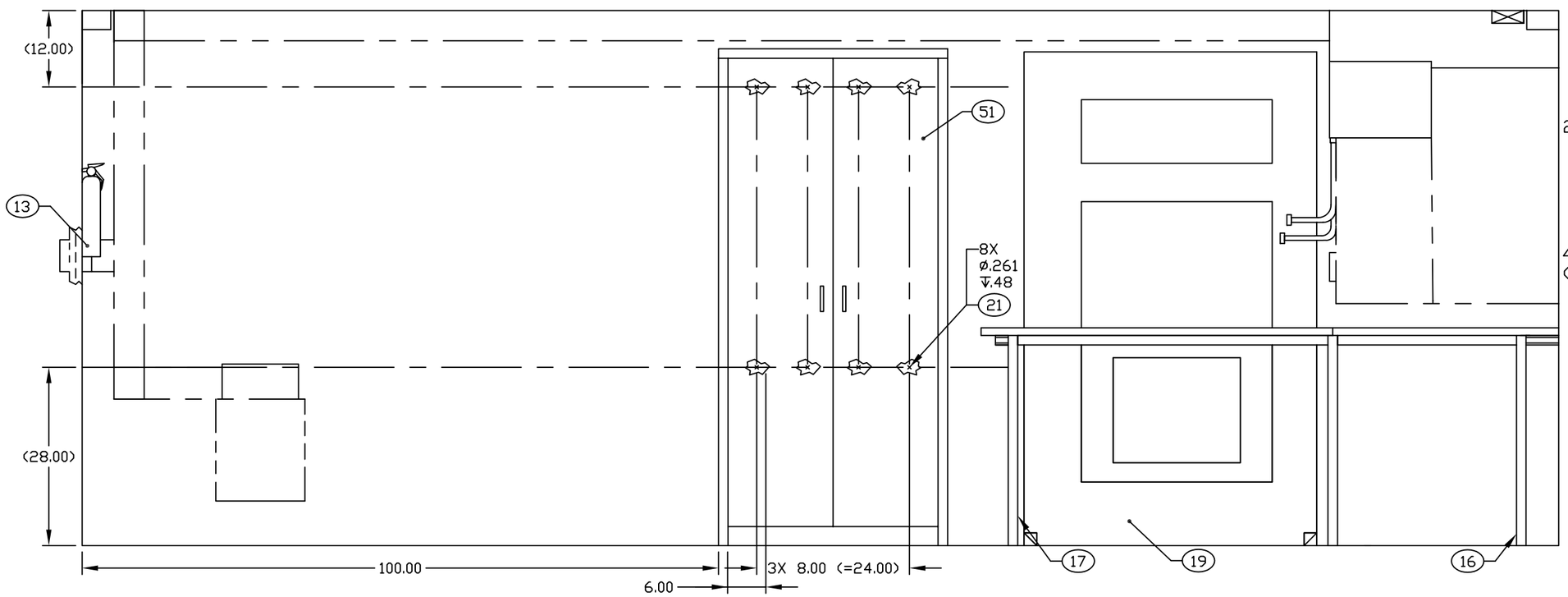

SECTION B–B SH 2

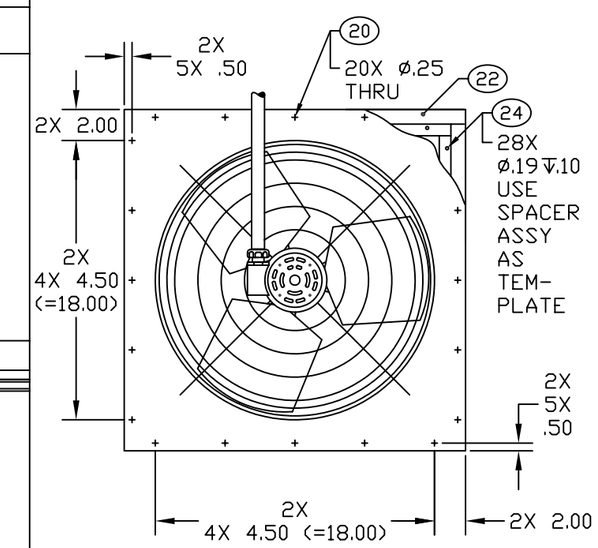

VIEW C
SCALE 1/5

ENGINEER	DATE	DRAWN BY	DATE	SIZE	CAGE CODE	DWG NO	REV
P. PHAN	92-09-18	P. PHAN	92-09-18	D	91145	MFPP010201	B
NEXT ASSEMBLY FINAL		CHECKER MAB	93-03	SCALE 1/10		SH 3	