REVISION HISTORY			
REV	DESCRIPTION	DATE	APPROVAL
C	REVISED AND PARTIALLY REDRAWN BY T H NGUYEN. (1) ITEM ADDED. (2) ITEM CHANGED. (3) LIGHT FIXTURES CHANGED. (4) HYDRAULIC LINES INSTALLATION CHANGED.	06-02-21	R VOTAW

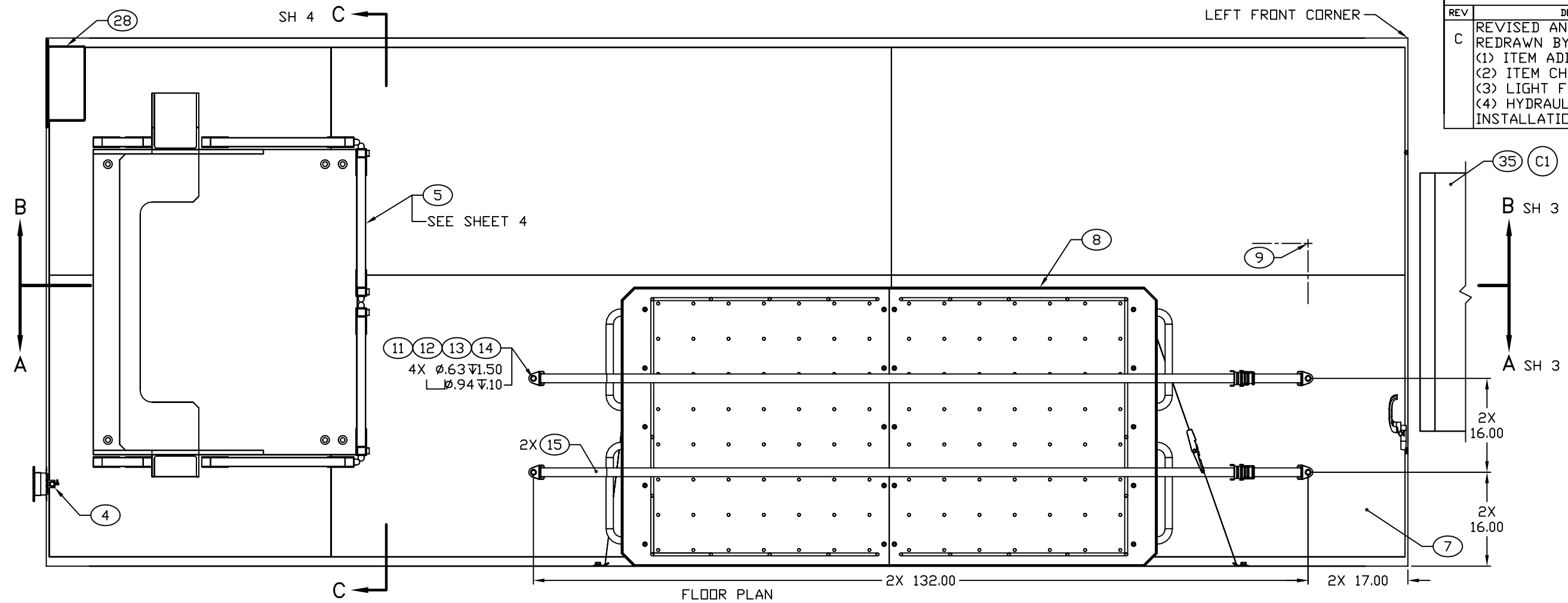

FLOOR PLAN

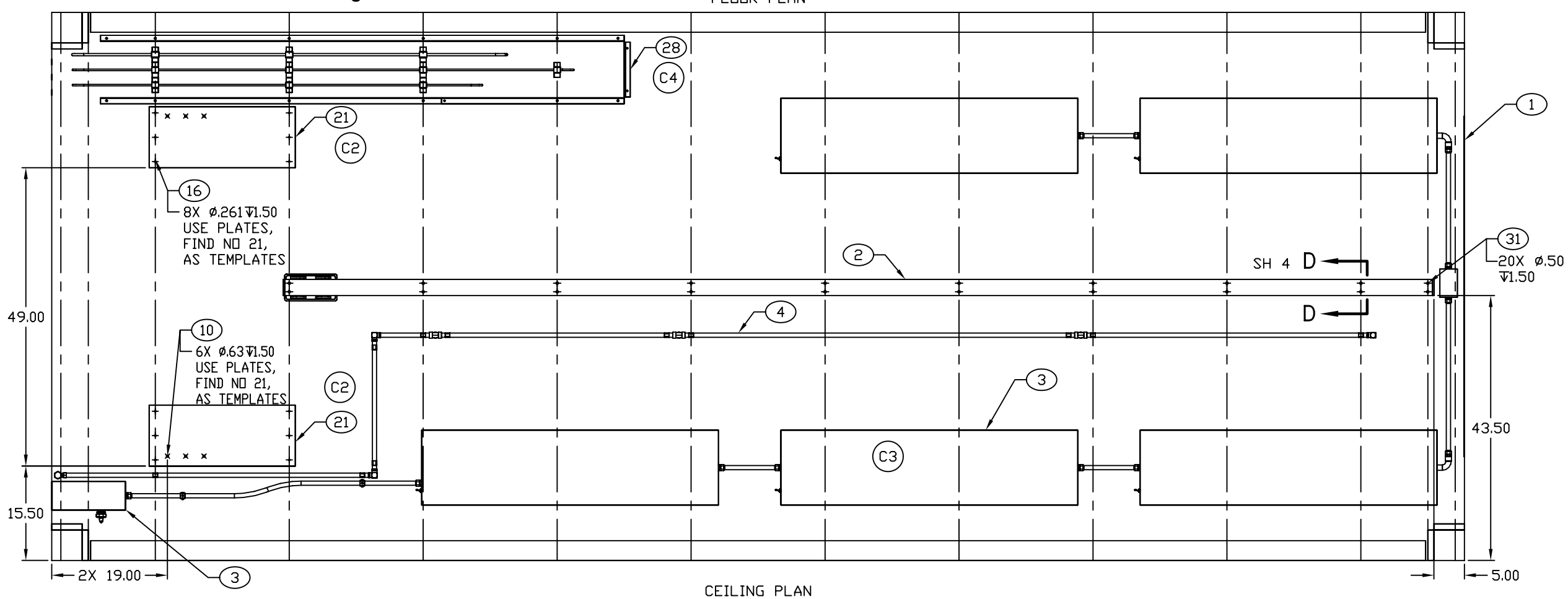

CEILING PLAN

ENGINEER	DATE	DRAWER	DATE	SIZE	CAGE CODE	DRAWING NUMBER	REV
T NGUYEN	02-02-25	TN	02-02-25	D	91145	MFHY060101	C
NEXT ASSEMBLY		CHECKER		SCALE		SHEET	
FINAL		MAB	02-02-25	1/10		2	

REVISION HISTORY			
REV	DESCRIPTION	DATE	APPROVAL
C	REVISED AND PARTIALLY REDRAWN BY T H NGUYEN. (1) ITEM ADDED.	06-02-21	R VOTAW

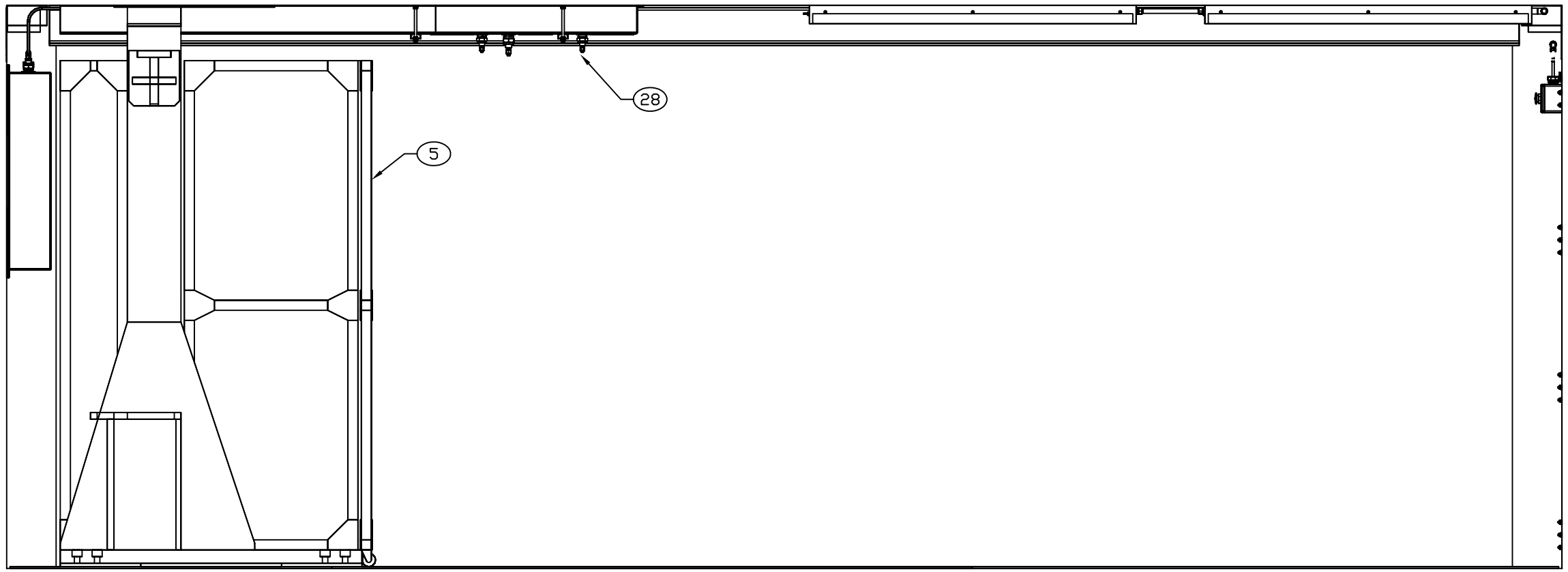

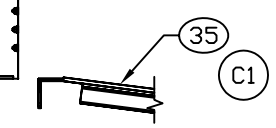

SECTION B–B SH 2

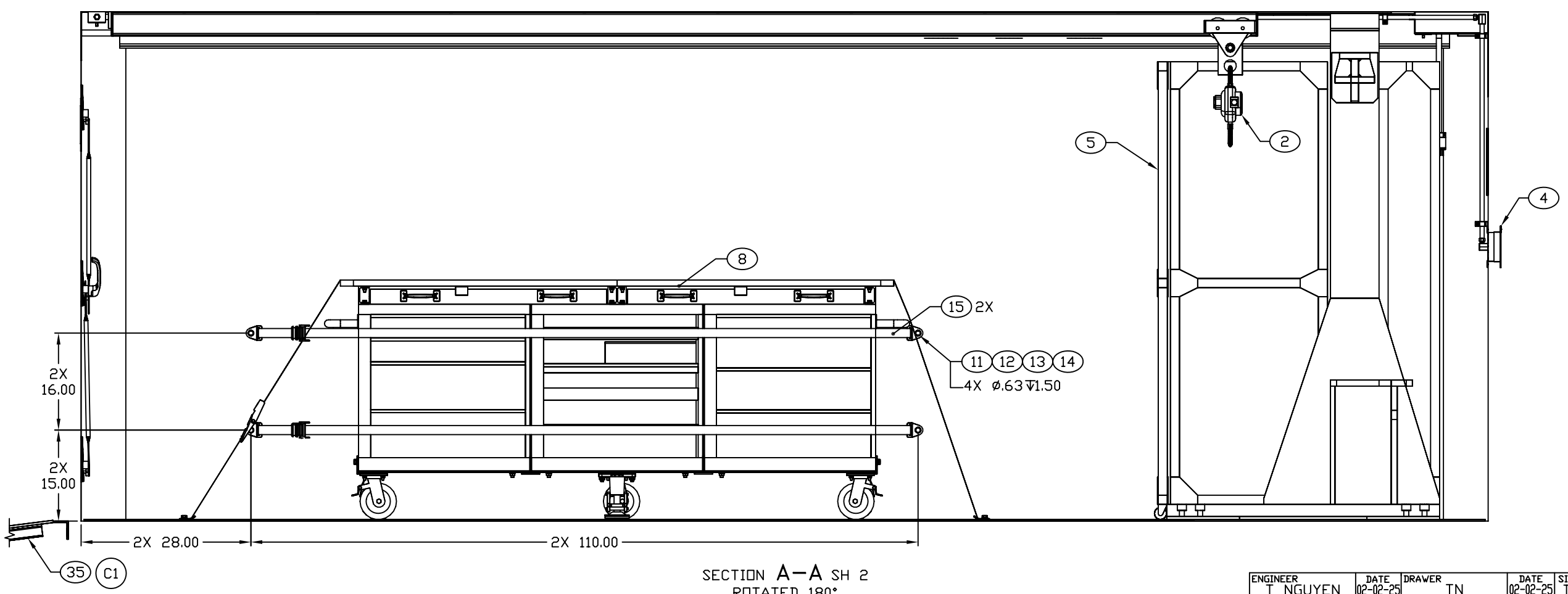

SECTION A–A SH 2
ROTATED 180°

ENGINEER	DATE	DRAWER	DATE	SIZE	CAGE CODE	DRAWING NUMBER	REV
T NGUYEN	02-02-25	TN	02-02-25	D	91145	MFHY060101	C
NEXT ASSEMBLY		CHECKER		SCALE		SHEET	
FINAL		MAB	02-02-25	1/10		3	