REVISION HISTORY			
REV	DESCRIPTION	DATE	APPROVAL

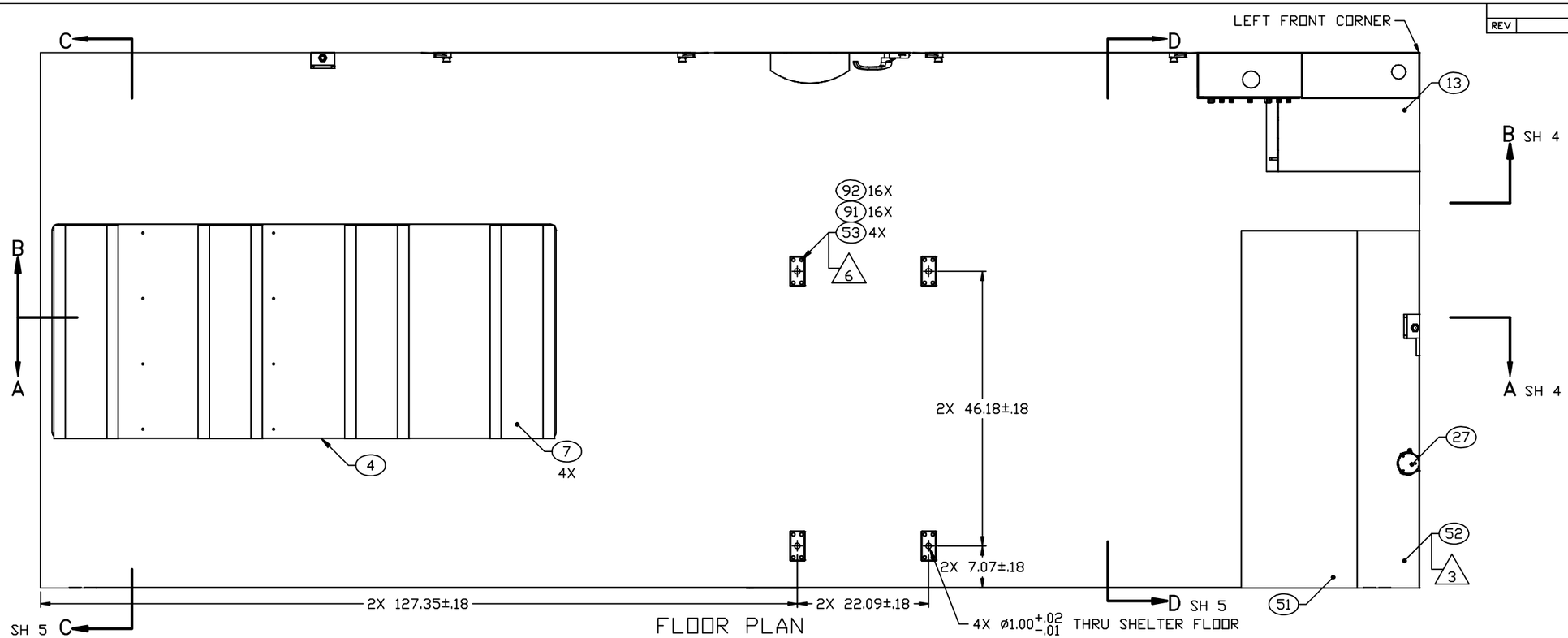

FLOOR PLAN

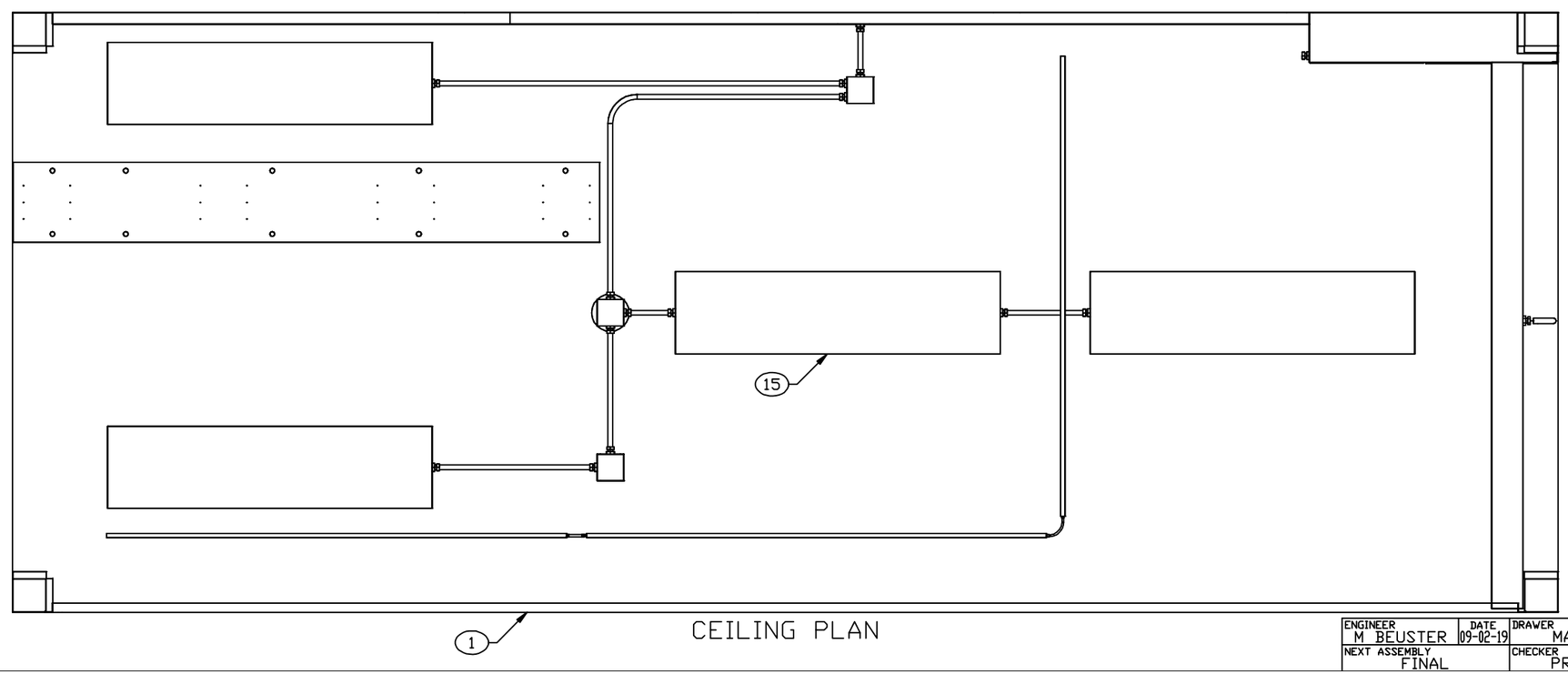

CEILING PLAN

ENGINEER	DATE	DRAWER	DATE	SIZE	CAGE CODE	DRAWING NUMBER	REV
M BEUSTER	09-02-19	MAB	09-02-19	D	91145	MFHM060101	–
NEXT ASSEMBLY		CHECKER		SCALE		SHEET	
FINAL		PRV	09-03-02	1/10		3	

REVISION HISTORY			
REV	DESCRIPTION	DATE	APPROVAL

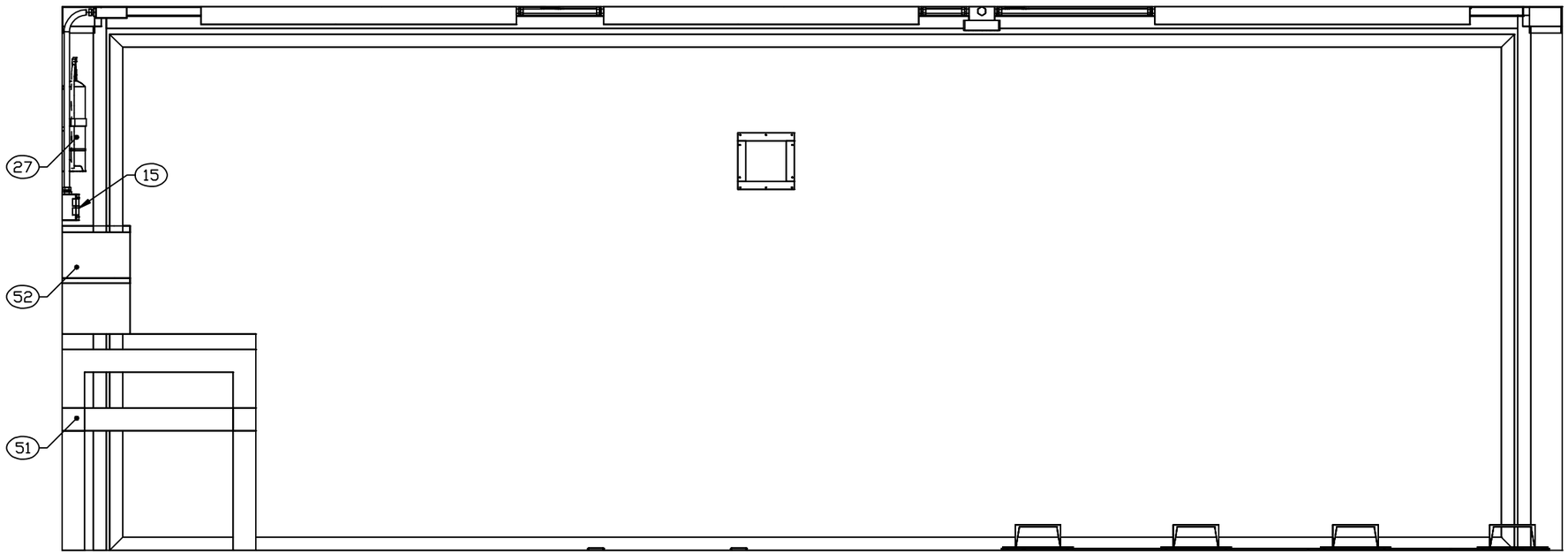

SECTION A–A SH 3
ROTATED 180°

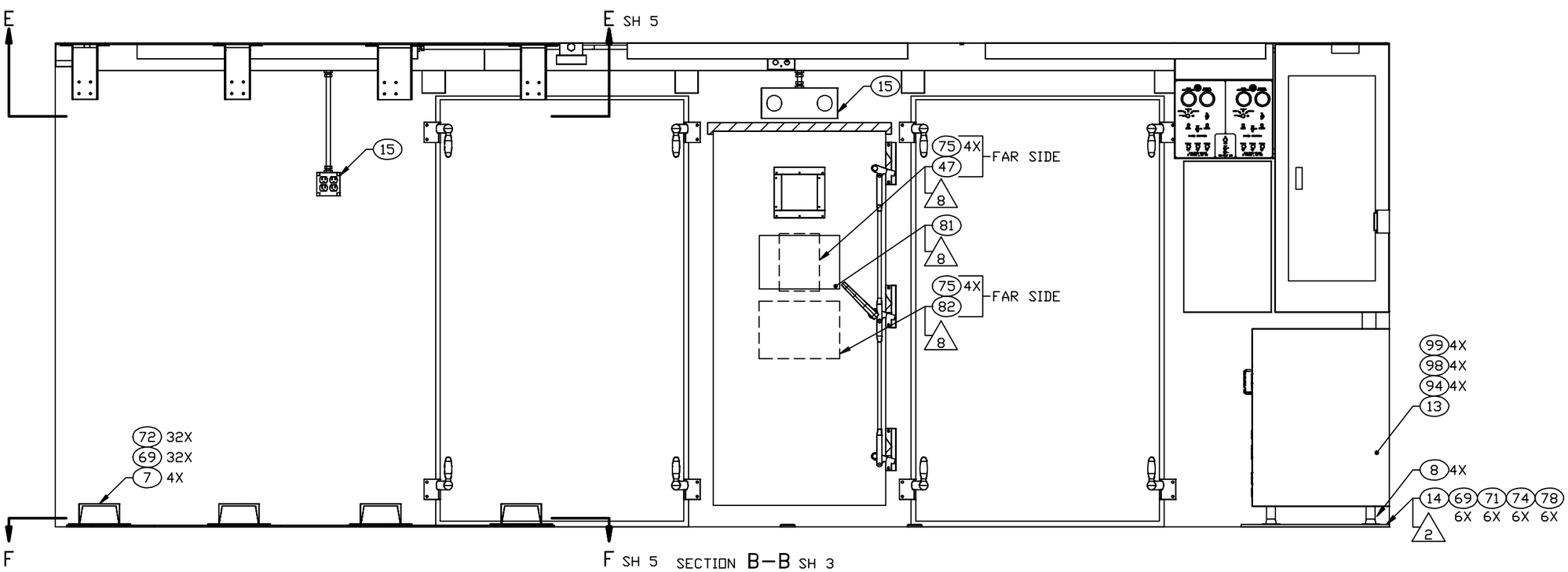

SECTION B–B SH 3

ENGINEER	DATE	DRAWER	DATE	SIZE	CAGE CODE	DRAWING NUMBER	REV
M BEUSTER	09-02-19	MAB	09-02-19	D	91145	MFHM060101	–
NEXT ASSEMBLY		CHECKER		SCALE		SHEET	
FINAL		PRV	09-03-02	1/10		4	