REVISION HISTORY			
REV	DESCRIPTION	DATE	APPROVAL
A	REVISED AND REDRAWN BY T H NGUYEN.	04-04-16	R VOTAW
B	REVISED AND PARTIALLY REDRAWN BY T H NGUYEN. (5) DIMENSION ADDED.	04-05-24	R VOTAW

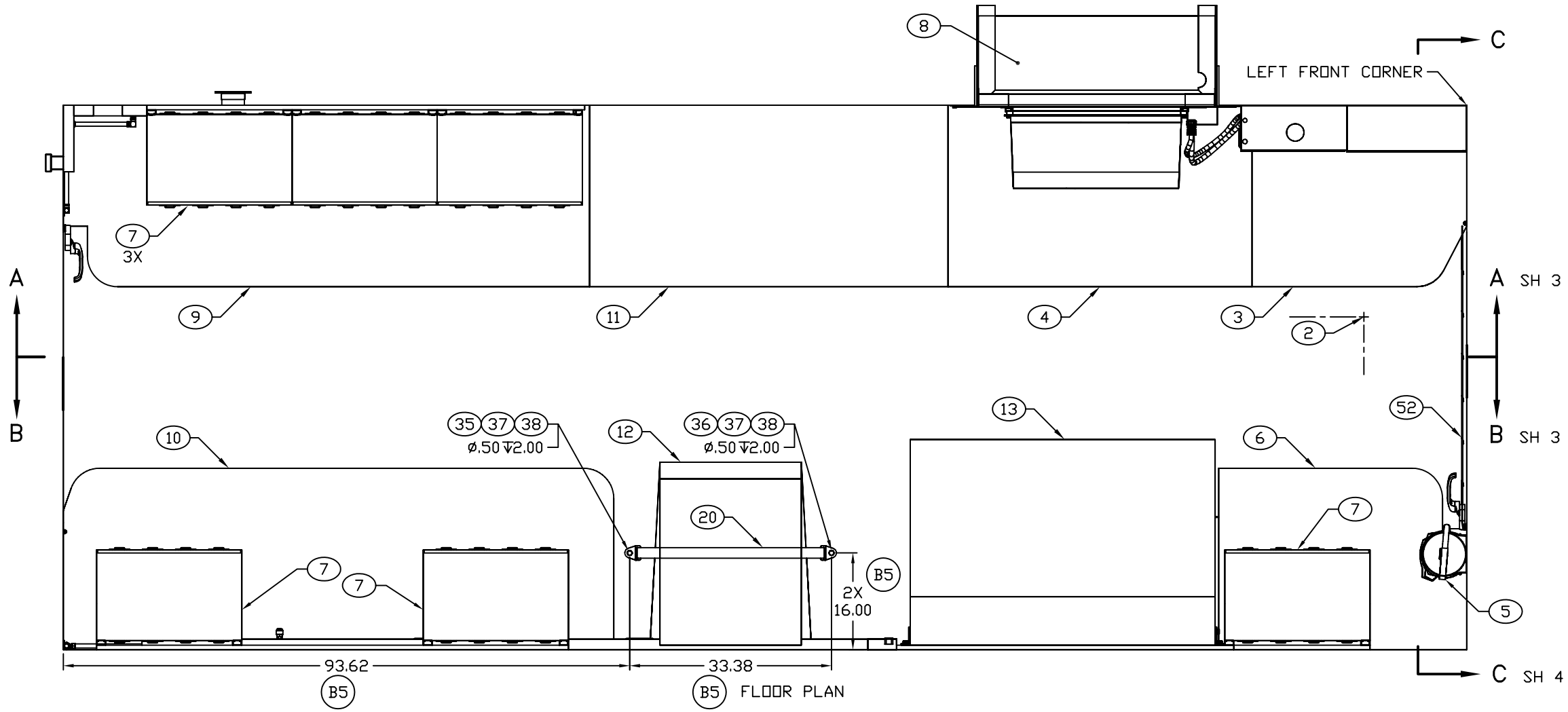

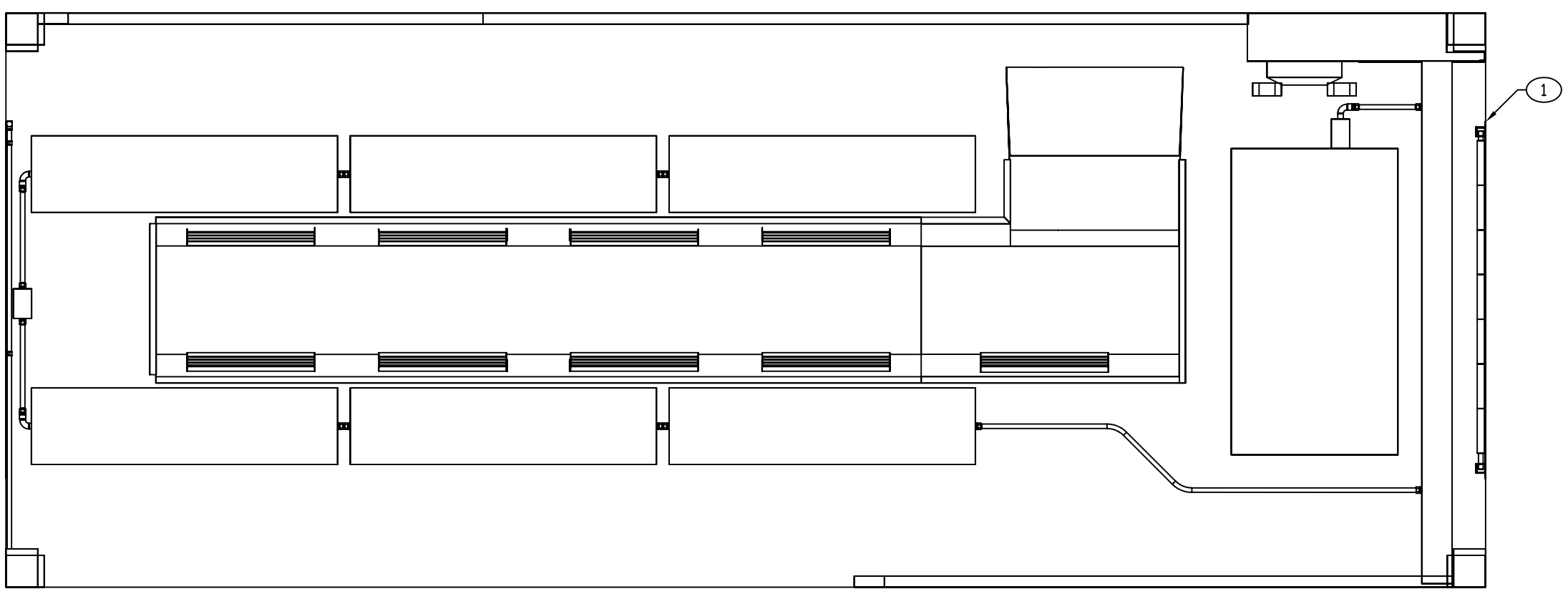

CEILING PLAN

ENGINEER	DATE	DRAWER	DATE	SIZE	CAGE CODE	DRAWING NUMBER	REV
BEUSTER	90-03-12	MAB	90-03-12	D	91145	MFHC010101	B
NEXT ASSEMBLY		CHECKER		SCALE		SHEET	
FINAL		A TUNGCAB	90-03-20	1/11		2	

REVISION HISTORY			
REV	DESCRIPTION	DATE	APPROVAL
B	REVISED AND PARTIALLY REDRAWN BY T H NGUYEN. (6) SECTION ADDED.	04-05-24	R VOTAW

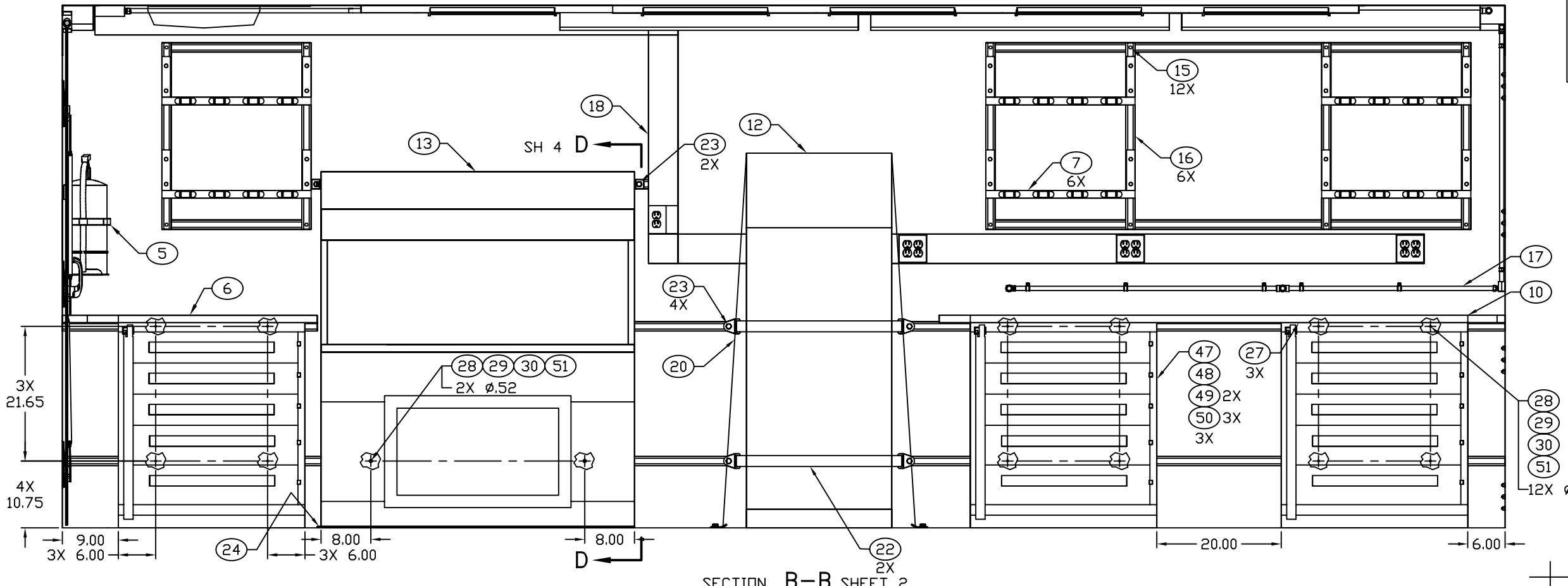

SECTION B–B SHEET 2
ROTATED 180°

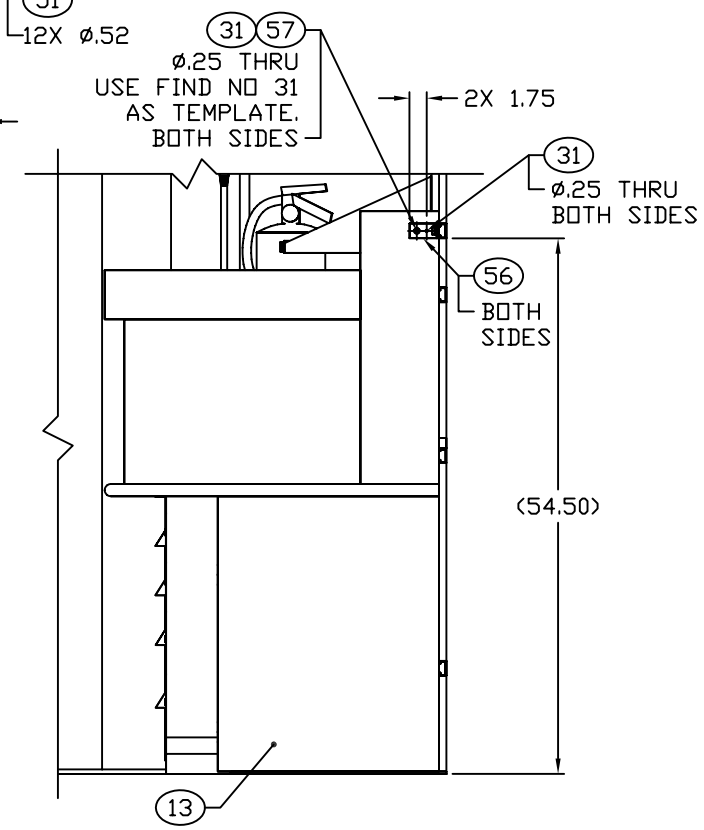

B6 SECTION D–D

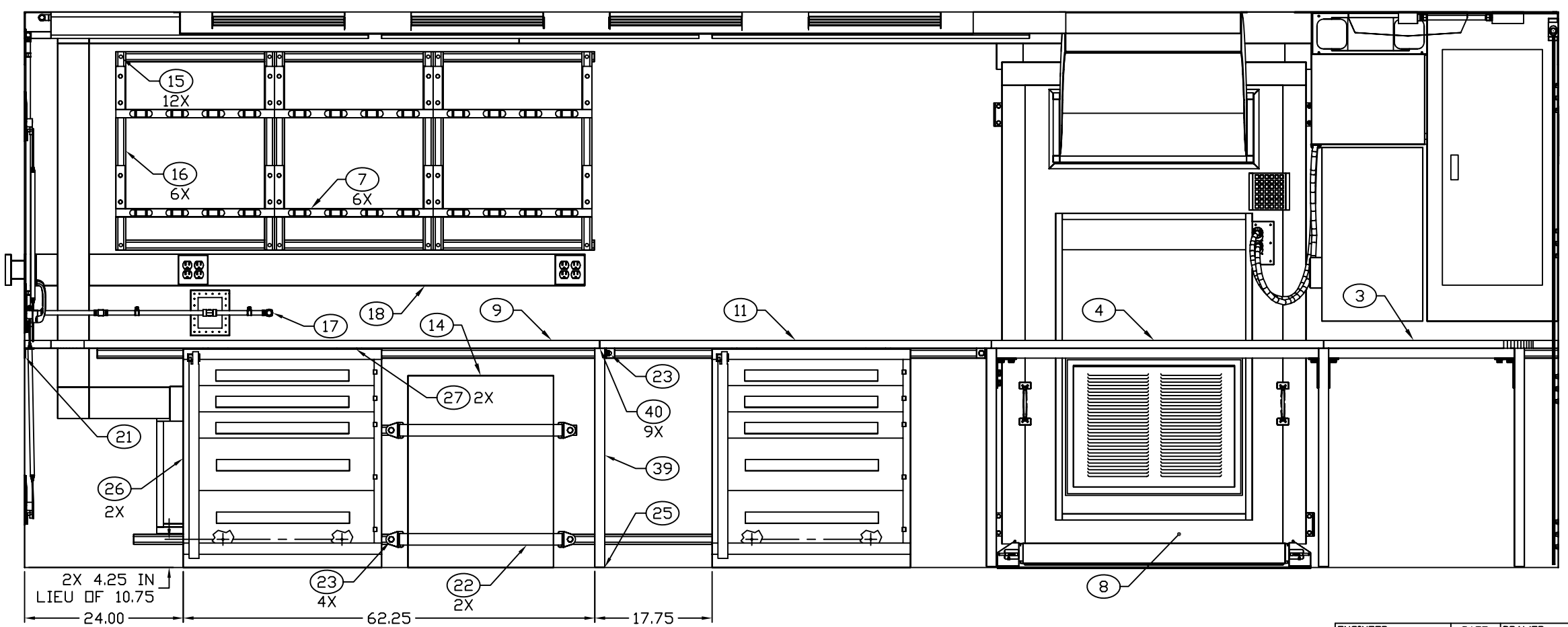

SECTION A–A SHEET 2

ENGINEER	DATE	DRAWER	DATE	SIZE	CAGE CODE	DRAWING NUMBER	REV
BEUSTER	90-03-12	MAB	90-03-12	D	91145	MFHC010101	B
NEXT ASSEMBLY		CHECKER		SCALE		SHEET	
FINAL		A TUNGCAB	90-03-20	1/10		3	