REVISION HISTORY			
REV	DESCRIPTION	DATE	APPROVAL
K	REVISED AND PARTIALLY REDRAWN BY M. BEUSTER. (3) FIRE EXTINGUISHER REDRAWN.	05-08-08	R A VOTAW

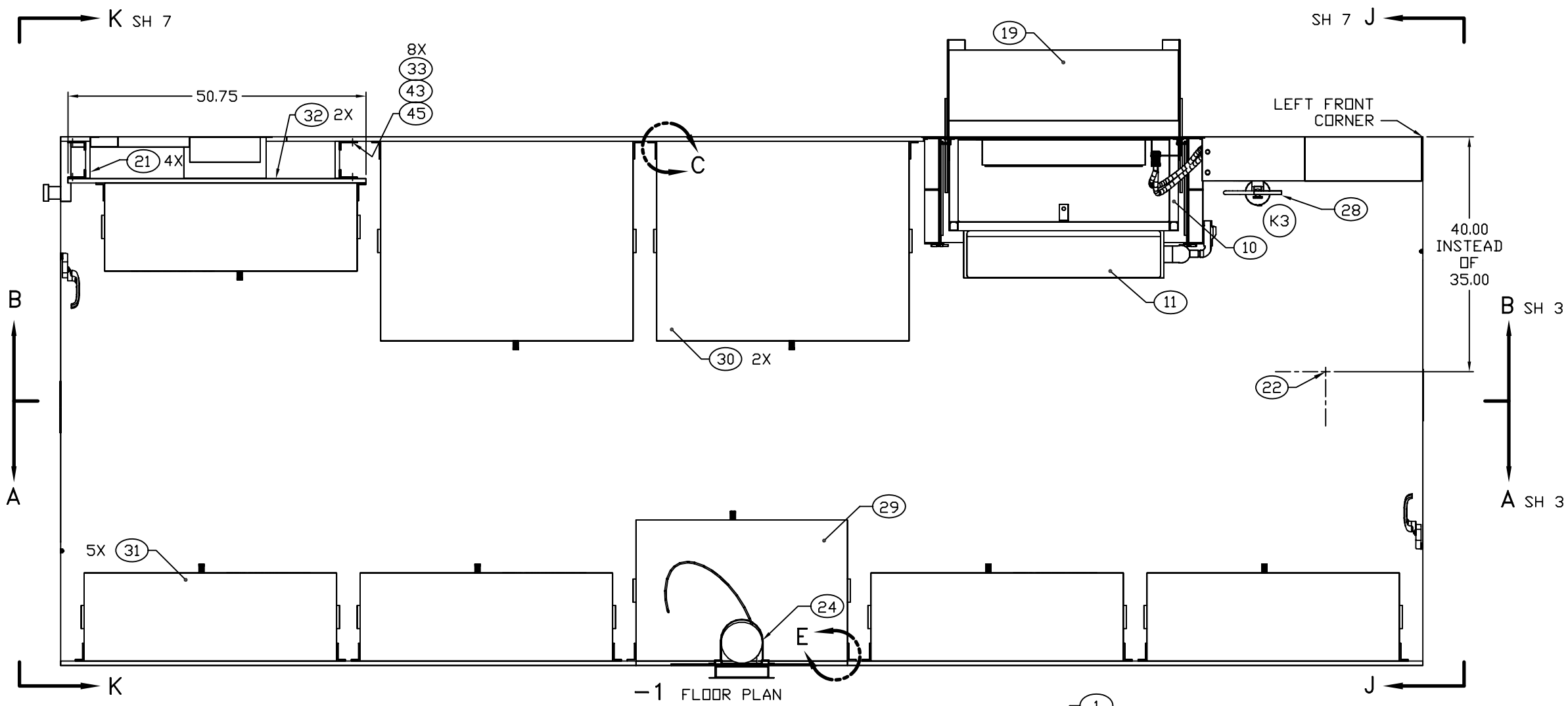

-1 FLOOR PLAN

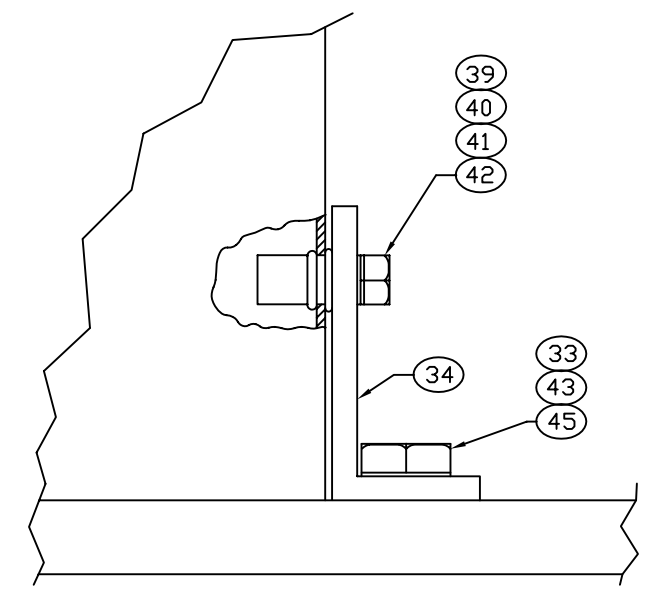

VIEW E
10X AS SHOWN
10X OPPOSITE
SCALE 1/1

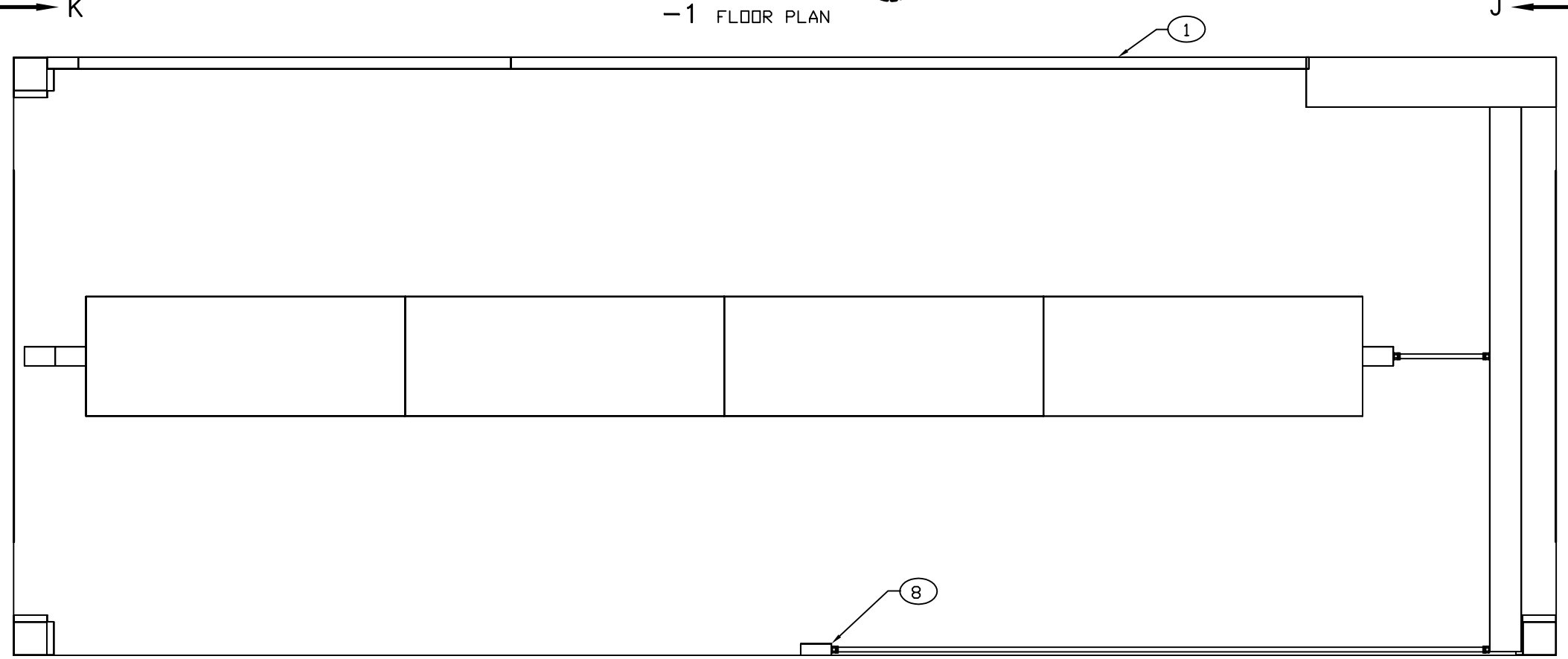

-1 CEILING PLAN

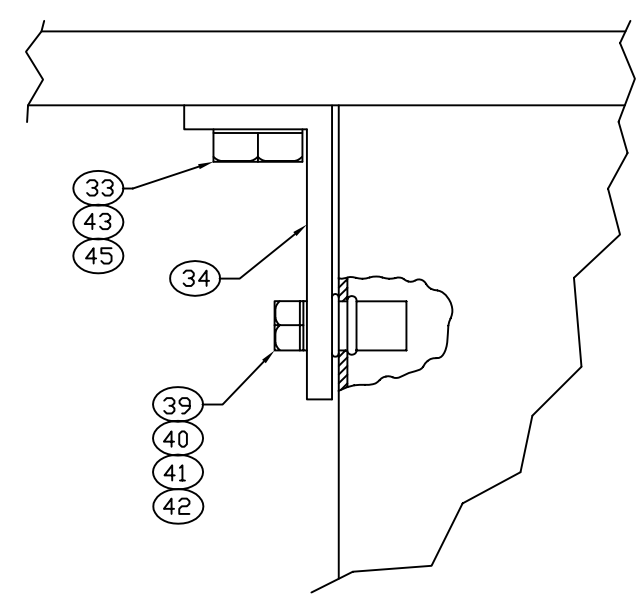

VIEW C
6X AS SHOWN
6X OPPOSITE
SCALE 1/1

ENGINEER	DATE	DRAWN BY	DATE	SIZE	CAGE CODE	DWG NO	REV
M.A. BEUSTER	93-05	MAB	02-05-01	D	91145	MFFS010401	K
NEXT ASSEMBLY FINAL		CHECKER A.S.T.	93-05	SCALE 1/11		SH 2	

REVISION HISTORY			
REV	DESCRIPTION	DATE	APPROVAL
K	REVISED AND PARTIALLY REDRAWN BY M. BEUSTER. (2) ITEM ADDED. (4) FIRE EXTINGUISHER BRACKET REDRAWN.	05-08-08	R A VOTAW

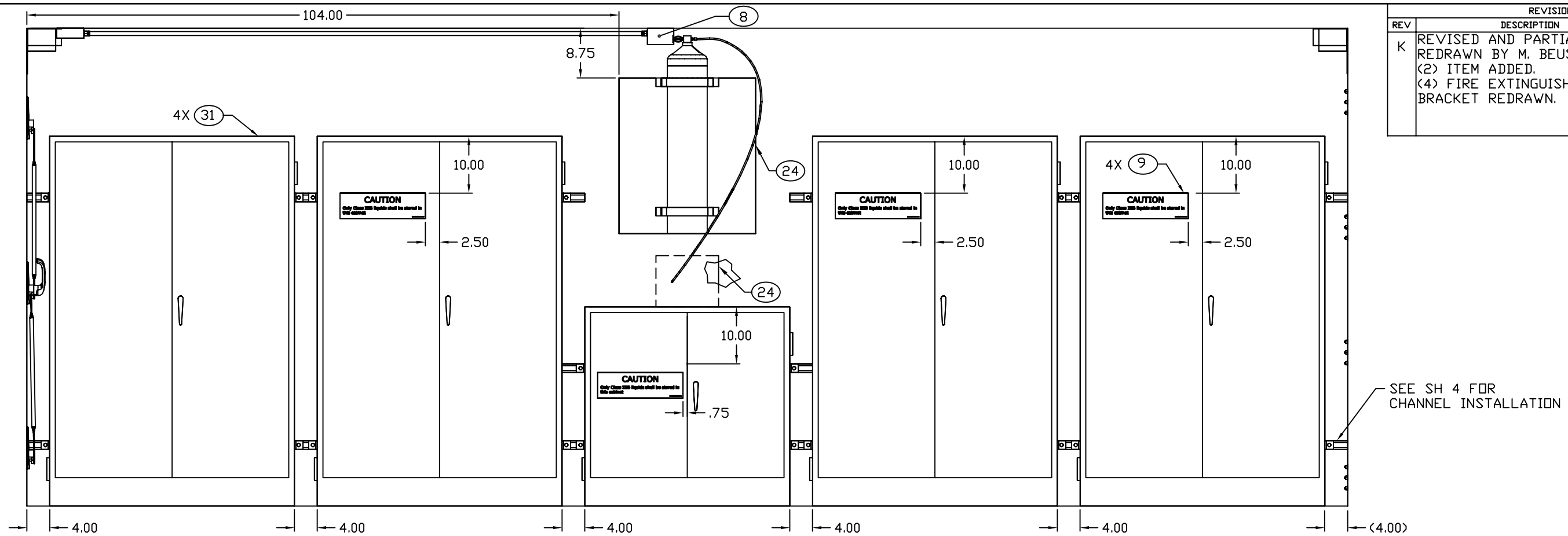

−1 AND −3

SECTION A−A SH 2 AND 5

ROTATED 180°

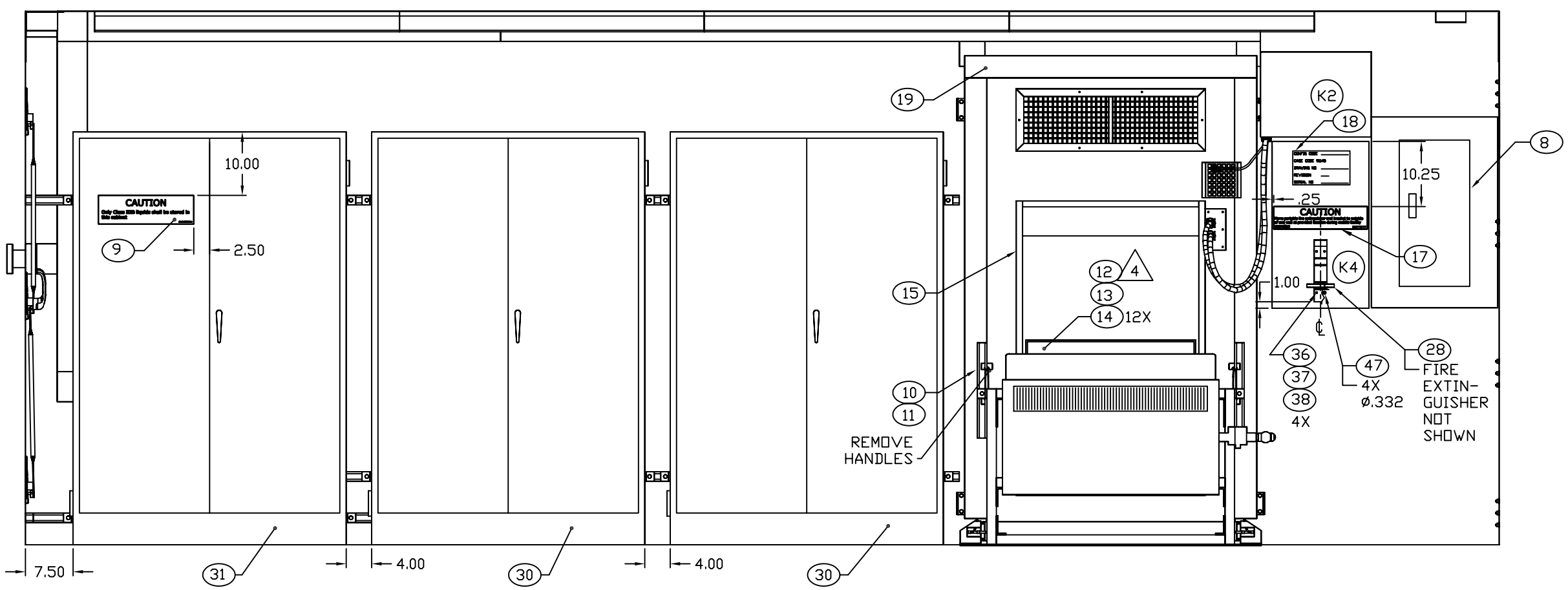

−1

SECTION B−B SH 2

ENGINEER	DATE	DRAWN BY	DATE	SIZE	CAGE CODE	DWG NO	REV
M.A. BEUSTER	93-05	MAB	02-05-01	D	91145	MFFS010401	K
NEXT ASSEMBLY FINAL		CHECKER A.S.T.	93-05	SCALE 1/10		SH 3	

REVISION HISTORY			
REV	DESCRIPTION	DATE	APPROVAL
K	REVISED AND PARTIALLY REDRAWN BY M. BEUSTER. (3) FIRE EXTINGUISHER REDRAWN.	05-08-08	R A VOTAW

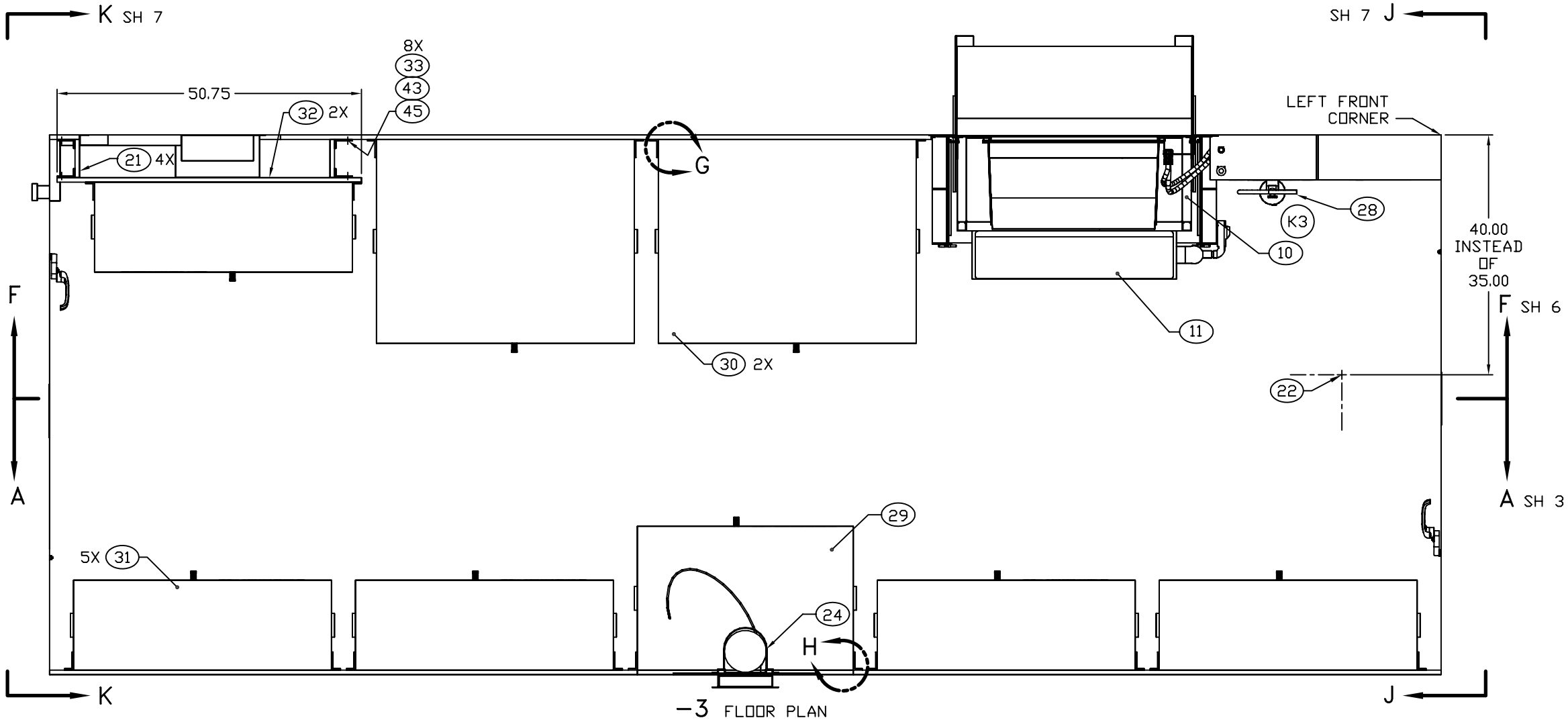

-3 FLOOR PLAN

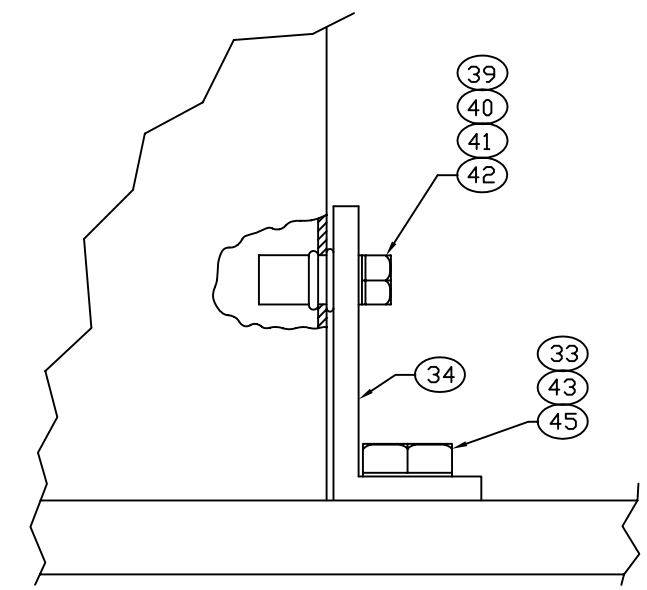

VIEW H
10X AS SHOWN
10X OPPOSITE
SCALE 1/1

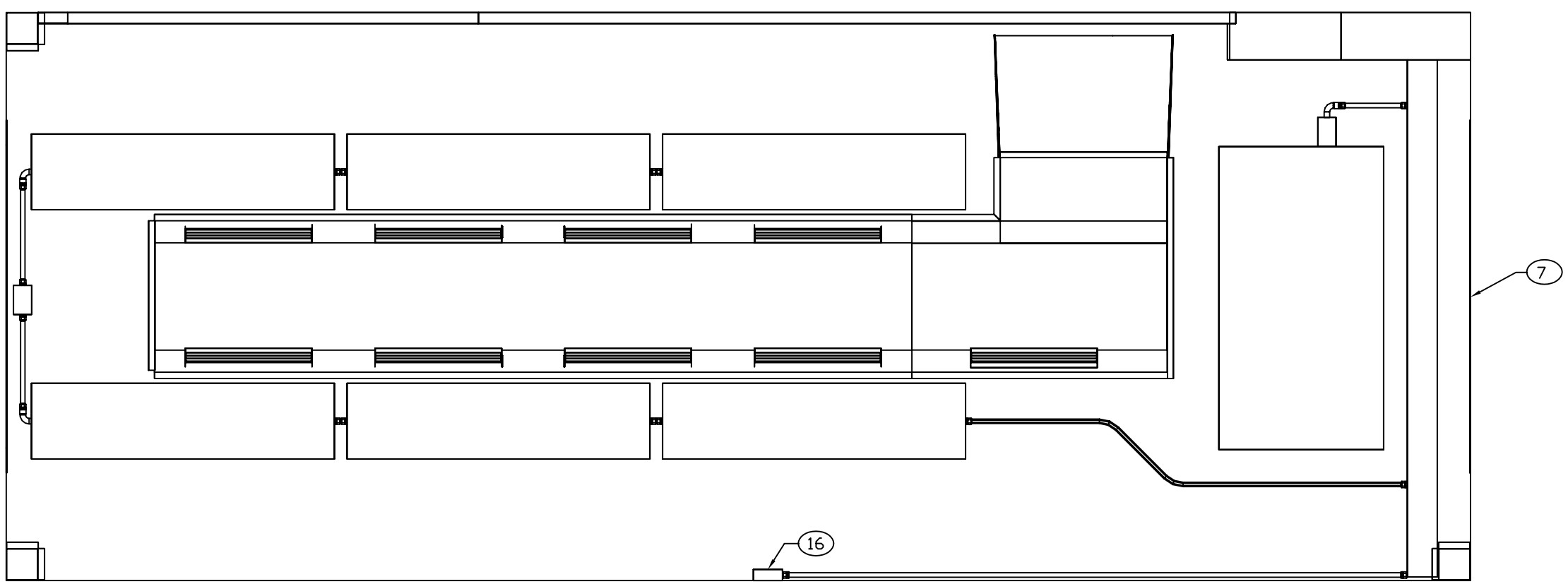

-3 CEILING PLAN

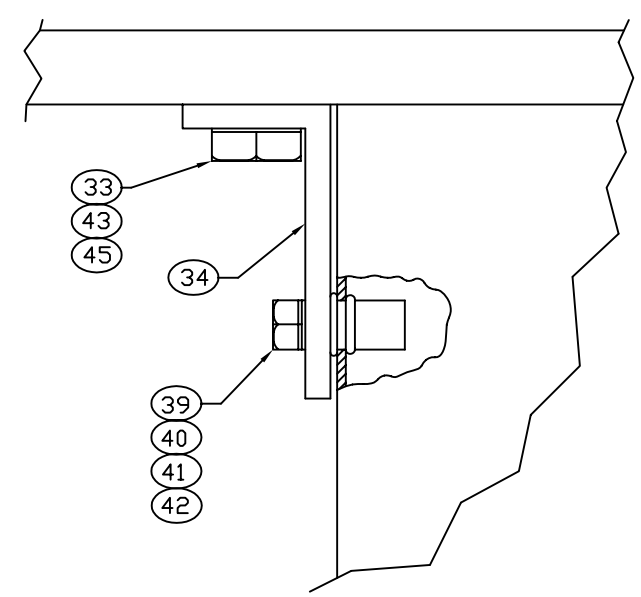

VIEW G
6X AS SHOWN
6X OPPOSITE
SCALE 1/1

ENGINEER	DATE	DRAWN BY	DATE	SIZE	CAGE CODE	DWG NO	REV
M.A. BEUSTER	93-05	MAB	02-05-01	D	91145	MFFS010401	K
NEXT ASSEMBLY FINAL		CHECKER A.S.T.	93-05	SCALE 1/11		SH 5	

REVISION HISTORY			
REV	DESCRIPTION	DATE	APPROVAL
K	REVISED AND PARTIALLY REDRAWN BY M. BEUSTER. (2) ITEM ADDED. (4) FIRE EXTINGUISHER BRACKET REDRAWN.	05-08-08	R A VOTAW

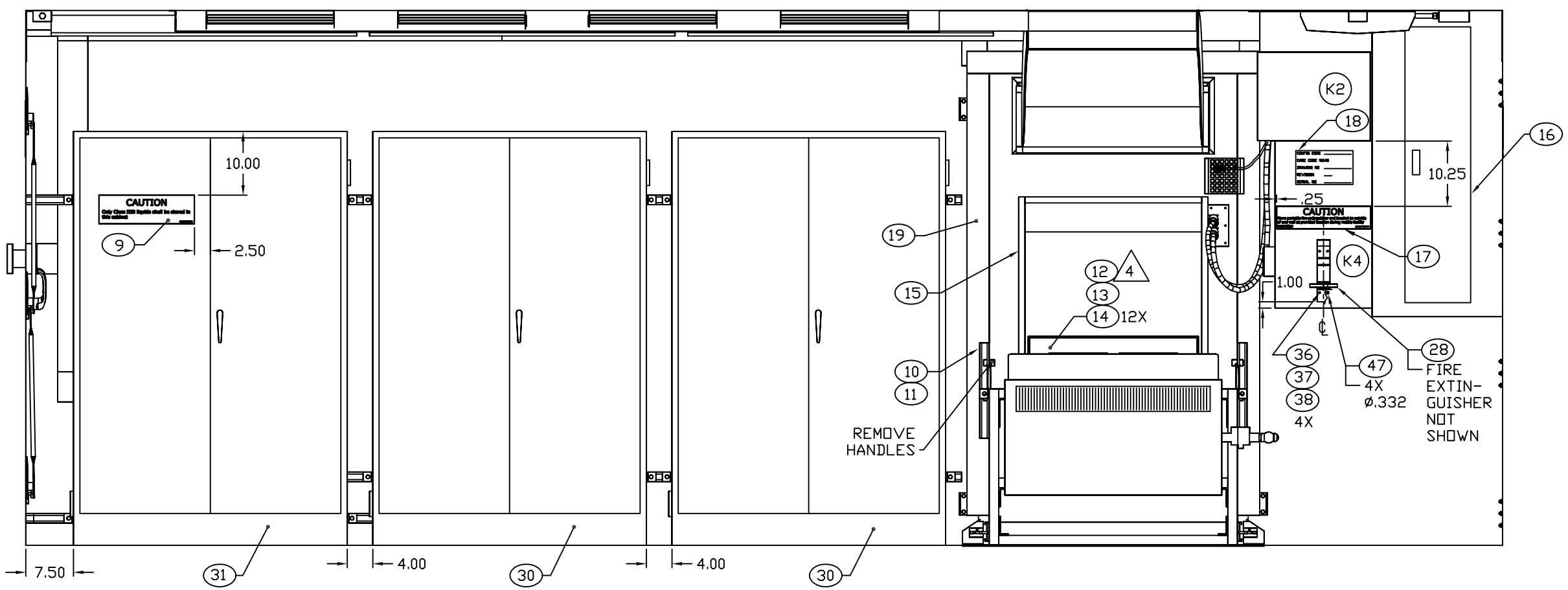

-3

SECTION F-F SH 5

ENGINEER	DATE	DRAWN BY	DATE	SIZE	CAGE CODE	DWG NO	REV
M.A. BEUSTER	93-05	MAB	02-05-01	D	91145	MFFS010401	K
NEXT ASSEMBLY	FINAL	CHECKER	A.S.T.	93-05	SCALE 1/10	SH 6	