REVISION HISTORY			
REV	DESCRIPTION	DATE	APPROVAL
B	REVISED AND PARTIALLY REDRAWN BY M. BEUSTER. FORMAT UPDATED. (2) NOTE ADDED. (3) ITEM DELETED.	2005-02-08	R A VOTAW

NOTE(S):

B2 2.1 MAKE ELECTRICAL CHANGES PER DRAWING NUMBER MFCL060190. THEN MOVE LIGHT FIXTURE AS SHOWN.

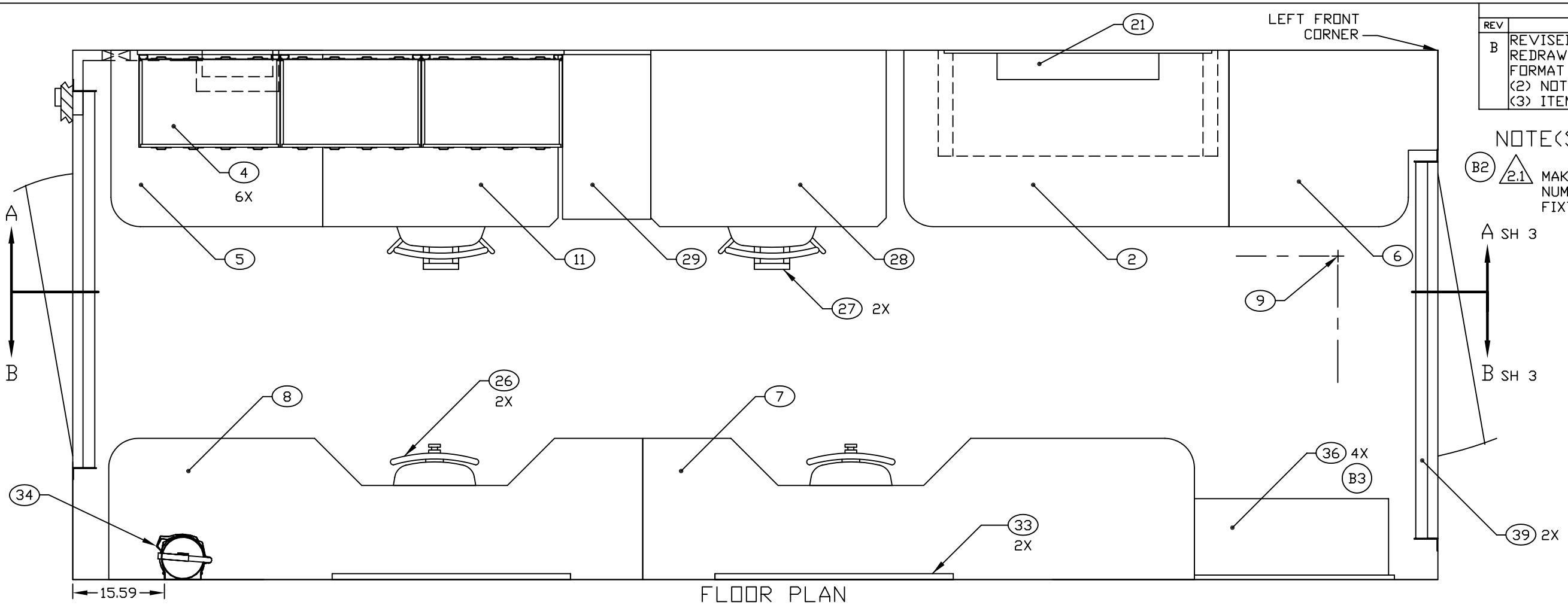

FLOOR PLAN

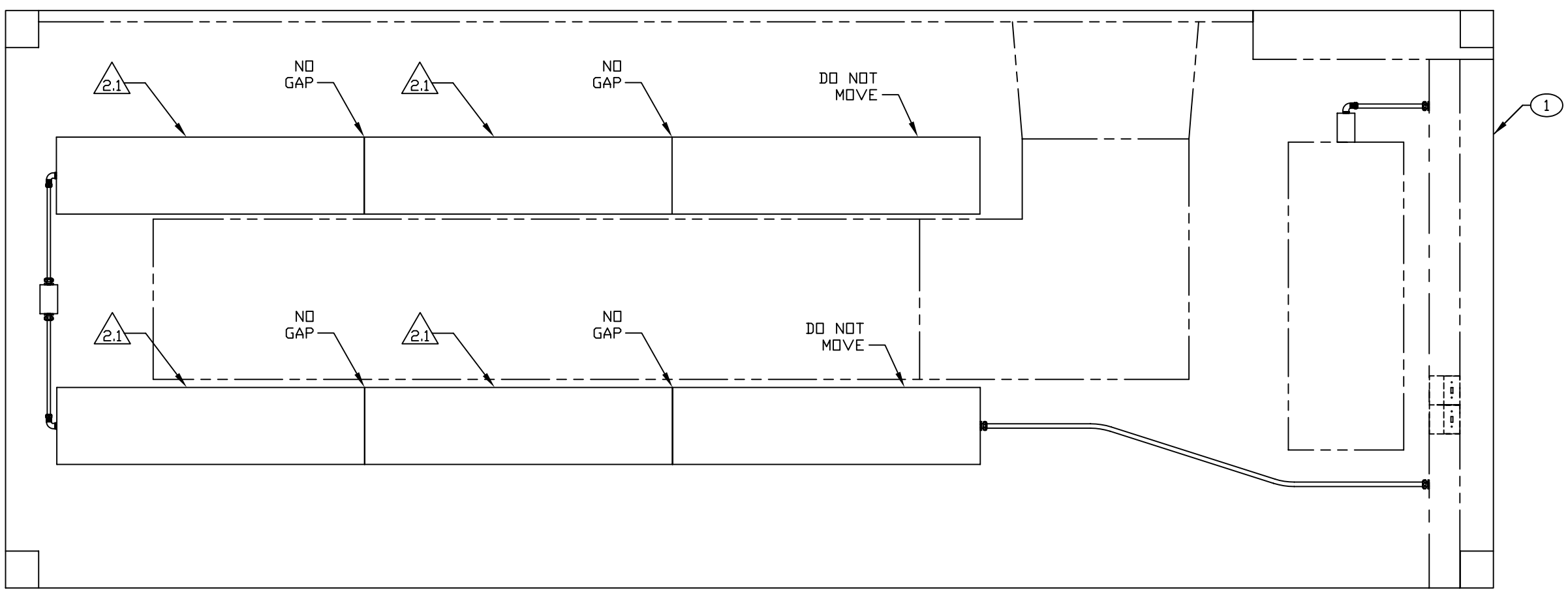

CEILING PLAN

ENGINEER	DATE	DRAWN BY	DATE	SIZE	CAGE CODE	DWG NO	REV
F. S. DELEON	83-01-10	P. VICENCIO	94-01-31	D	91145	MFCL060101	B
NEXT ASSEMBLY		CHECKER		SCALE		SH	
FINAL		MAB	88-09-09	1/10		2	

REVISION HISTORY			
REV	DESCRIPTION	DATE	APPROVAL
B	REVISED AND PARTIALLY REDRAWN BY M. BEUSTER. FORMAT UPDATED. (2) NOTE DELETED. (3) ITEM DELETED.	2005-02-08	R A VOTAW

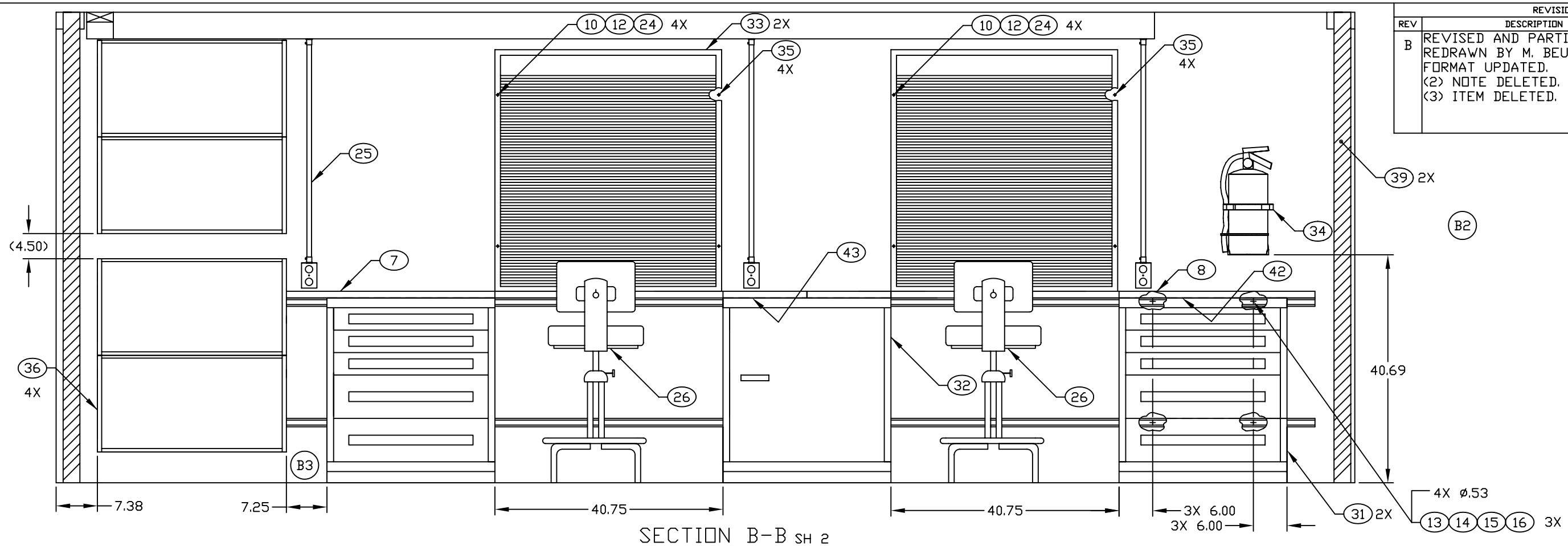

SECTION B-B SH 2
ROTATED 180°

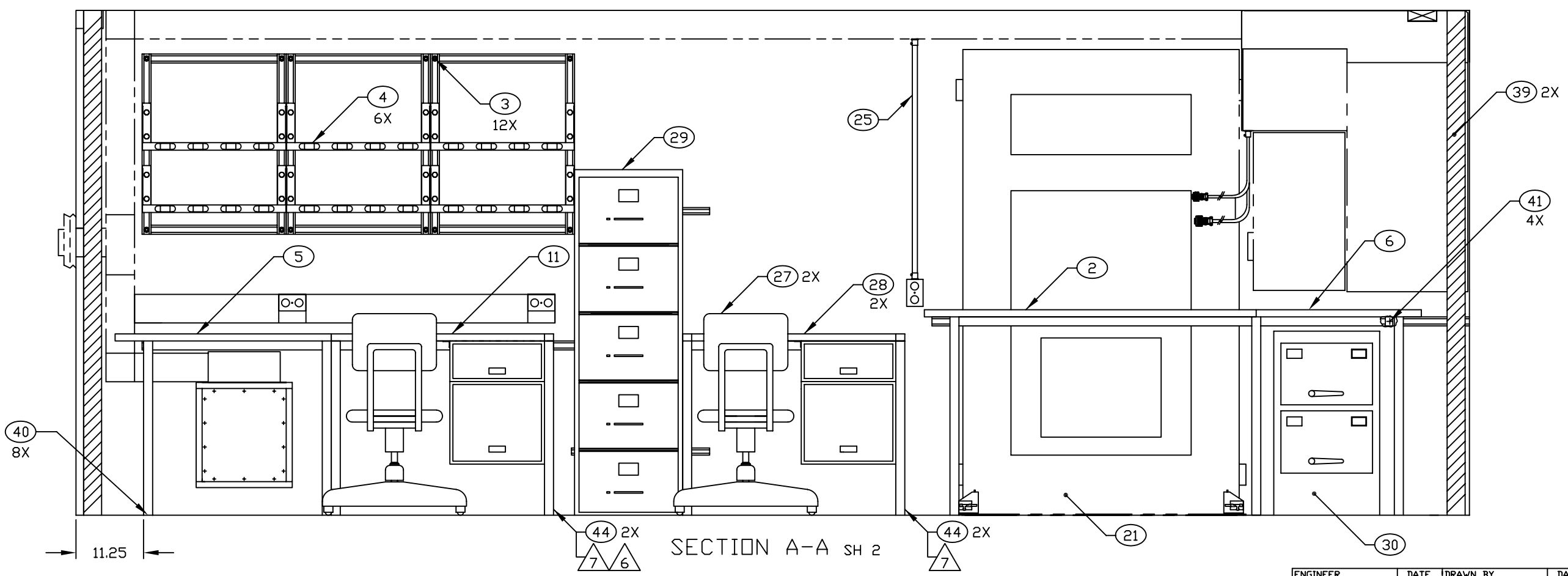

SECTION A-A SH 2

ENGINEER	DATE	DRAWN BY	DATE	SIZE	CAGE CODE	DWG NO	REV
F. S. DELEON	83-01-10	P. VICENCIO	94-01-31	D	91145	MFCL060101	B
NEXT ASSEMBLY FINAL		CHECKER MAB	88-09-09	SCALE 1/10		SH 3	