REVISION HISTORY			
REV	DESCRIPTION	DATE	APPROVAL
B	REVISED AND PARTIALLY REDRAWN BY M. BEUSTER. FORMAT UPDATED.	2006-01-20	R A VOTAW

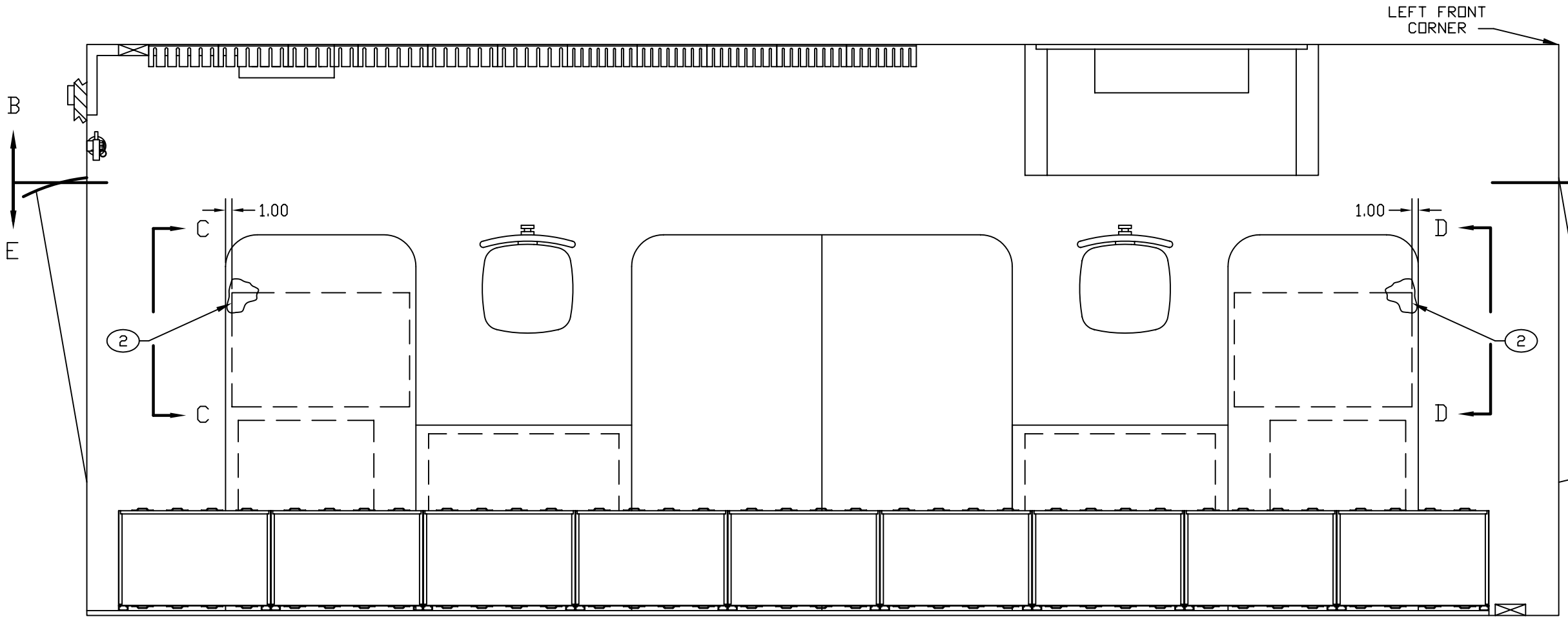

FLOOR PLAN

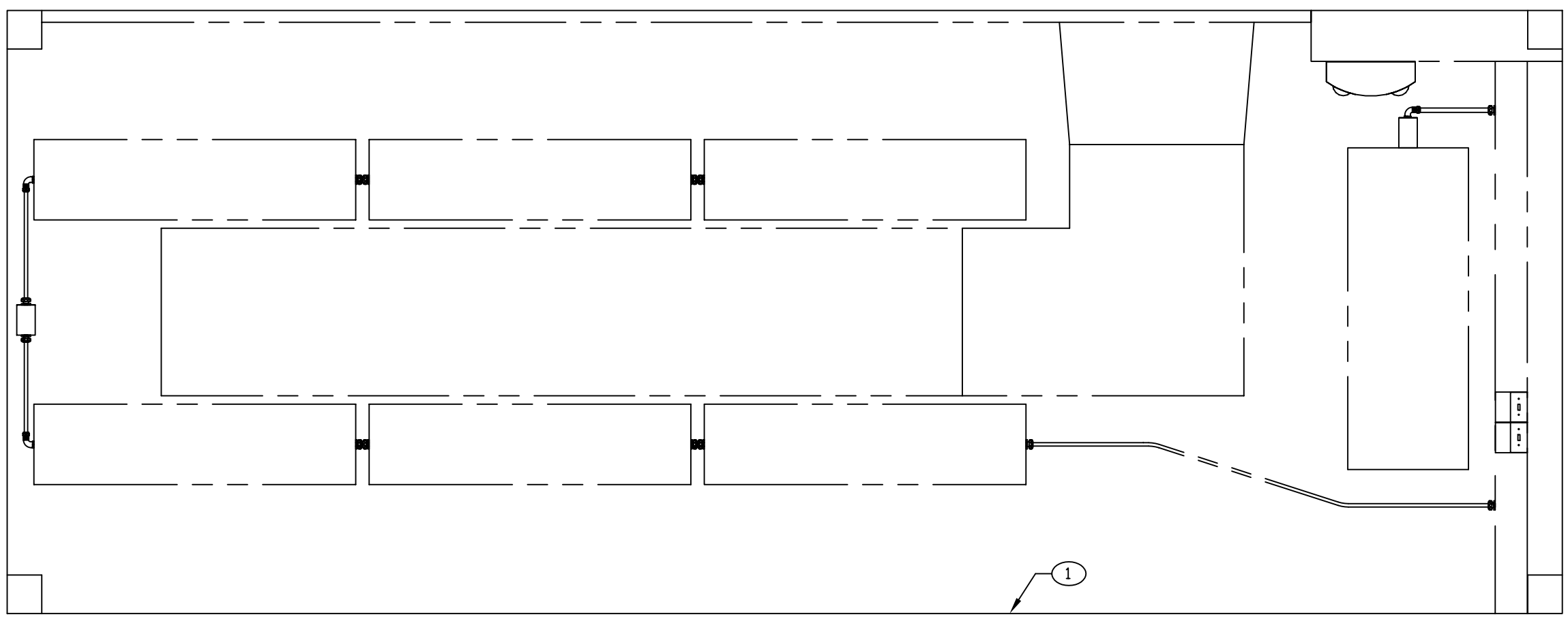

CEILING PLAN

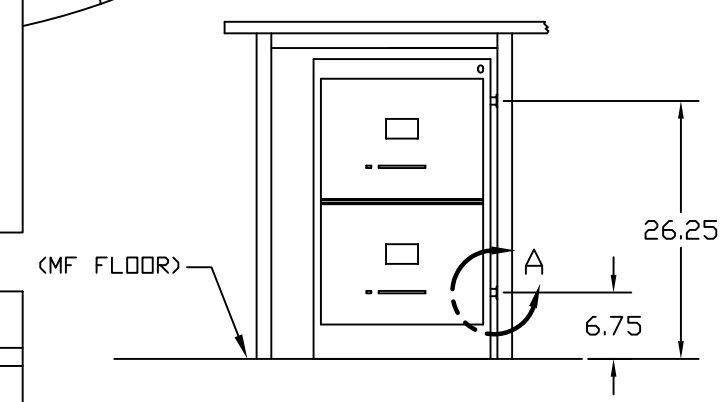

VIEW C-C SHOWN
ROTATED 90° CCW
VIEW D-D OPPOSITE

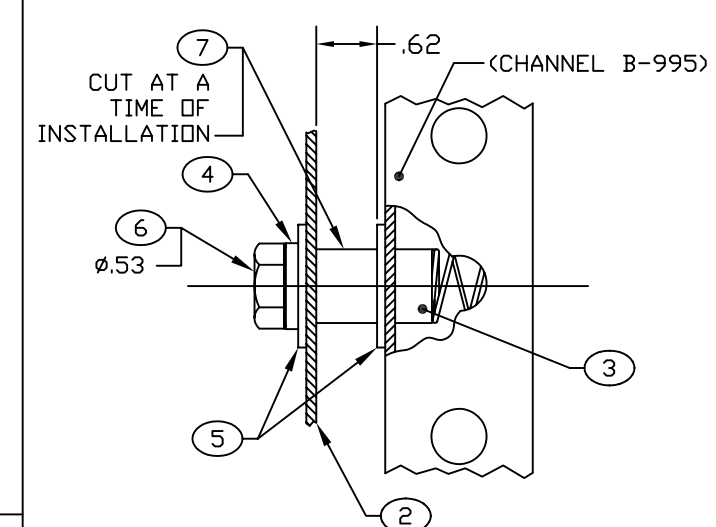

4X VIEW A
SCALE 1/1

ENGINEER	DATE	DRAWN BY	DATE	SIZE	CAGE CODE	DWG NO	REV
BEUSTER	83-08-17	NGUYEN	94-06-07	D	91145	MFCL040101	B
NEXT ASSEMBLY	FINAL	CHECKER	RJ	88-03-02	SCALE 1/10	SH 2	

REVISION HISTORY			
REV	DESCRIPTION	DATE	APPROVAL
B	REVISED AND PARTIALLY REDRAWN BY M. BEUSTER. FORMAT UPDATED.	2006-01-20	R A VOTAW

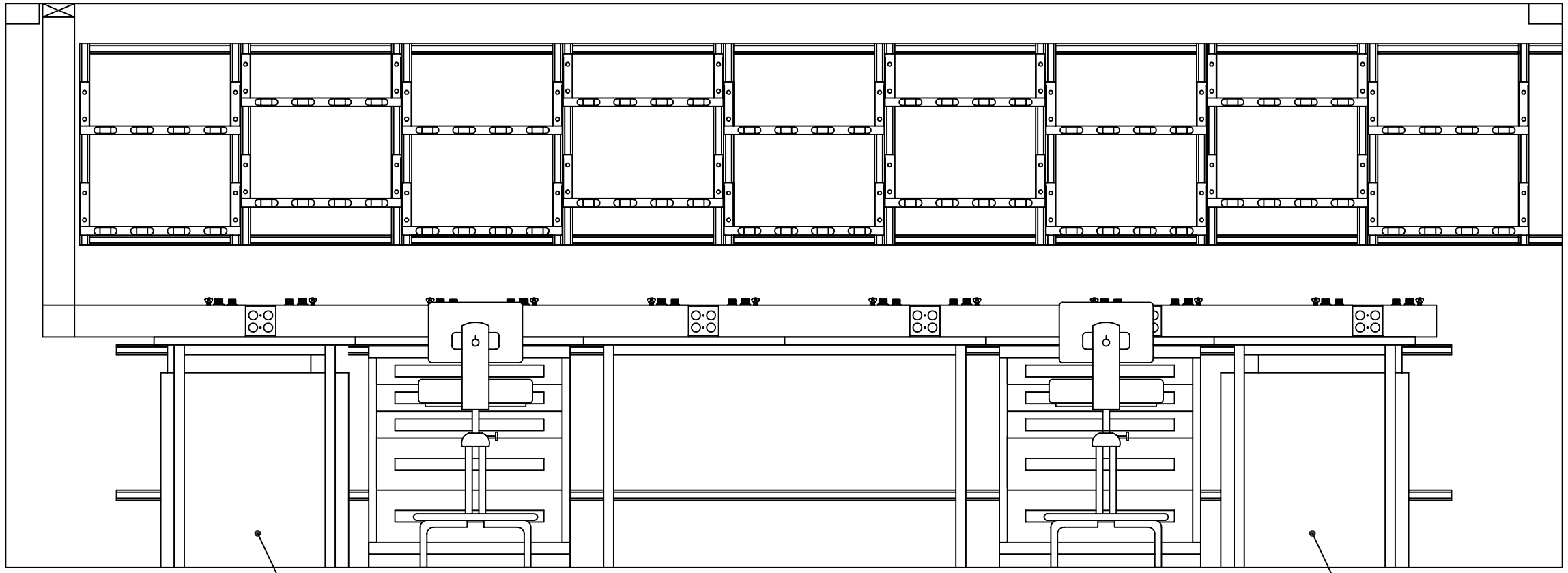

SECTION E-E SH 2
ROTATED 180°

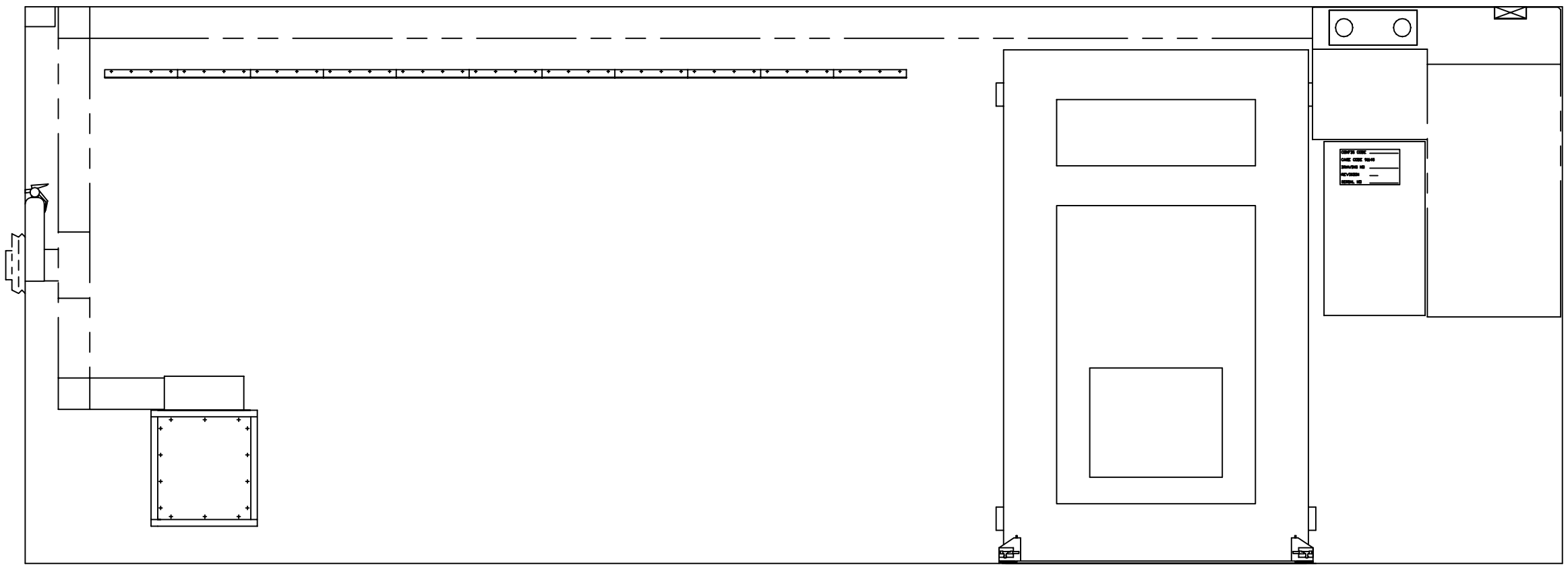

SECTION B-B SH 2

ENGINEER	DATE	DRAWN BY	DATE	SIZE	CAGE CODE	DWG NO	REV
BEUSTER	83-08-17	NGUYEN	94-06-07	D	91145	MFCL040101	B
NEXT ASSEMBLY FINAL		CHECKER RJ	88-03-02	SCALE 1/10		SH 3	