| REVISIONS | | | |
|---|---|---|---|
| REV | DESCRIPTION | DATE | APPROVAL |
| A | QUANTITY OF FIND NO 48 CHANGED. | | |

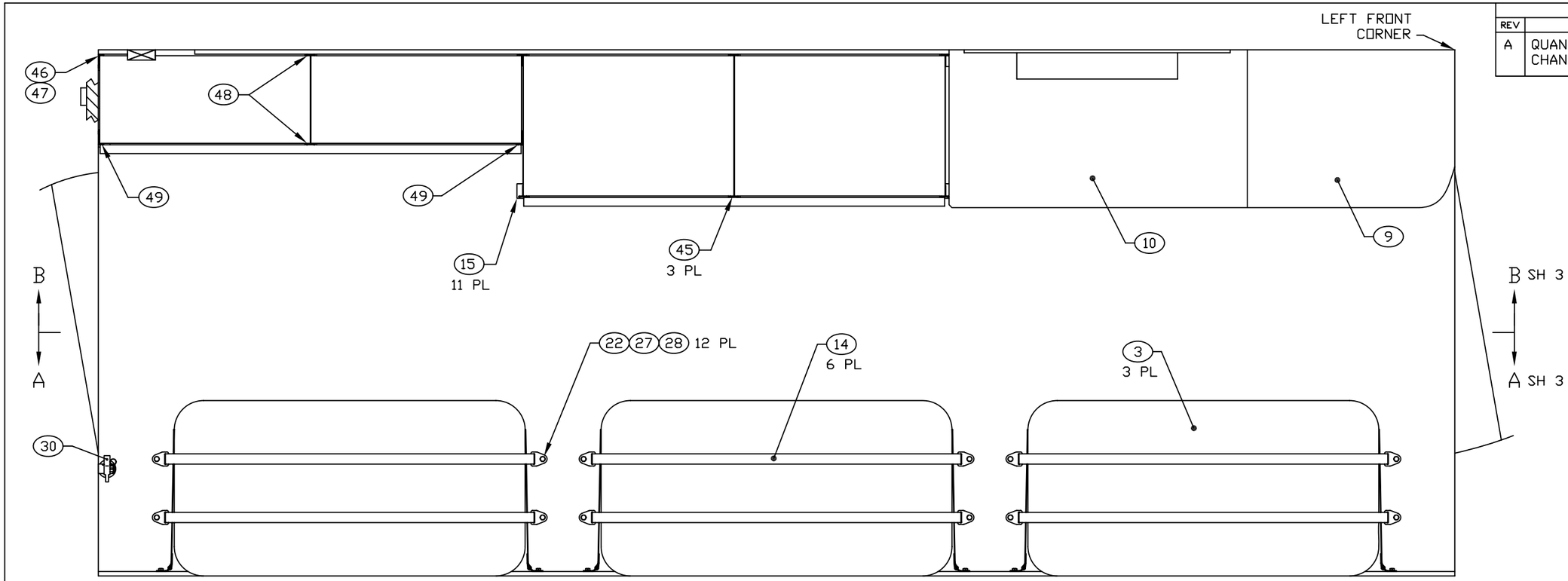


FLOOR PLAN

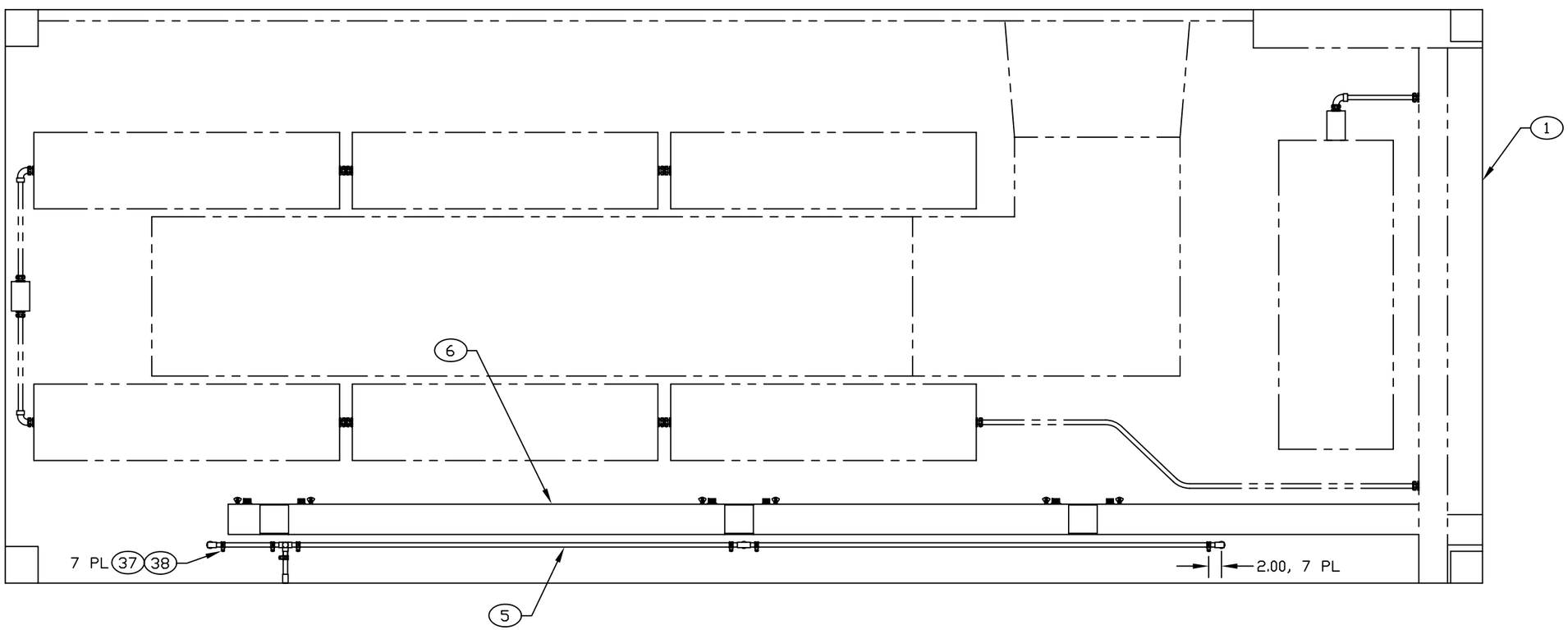


CEILING PLAN

| ENGINEER | DATE | DRAWN BY | DATE | SIZE | CAGE CODE | DWG NO | REV |
|---|---|---|---|---|---|---|---|
| T. NGUYEN | 94-06 | T. NGUYEN | 94-06-24 | D | 91145 | MF BR010201 | A |
| NEXT ASSEMBLY FINAL | | CHECKER MAB | 94-08 | SCALE 1/10 | | SH 2 | |

BR012012.DWG

| REVISIONS | | | |
|---|---|---|---|
| REV | DESCRIPTION | DATE | APPROVAL |
| A | QUANTITY OF FIND NO 48 CHANGED. | | |

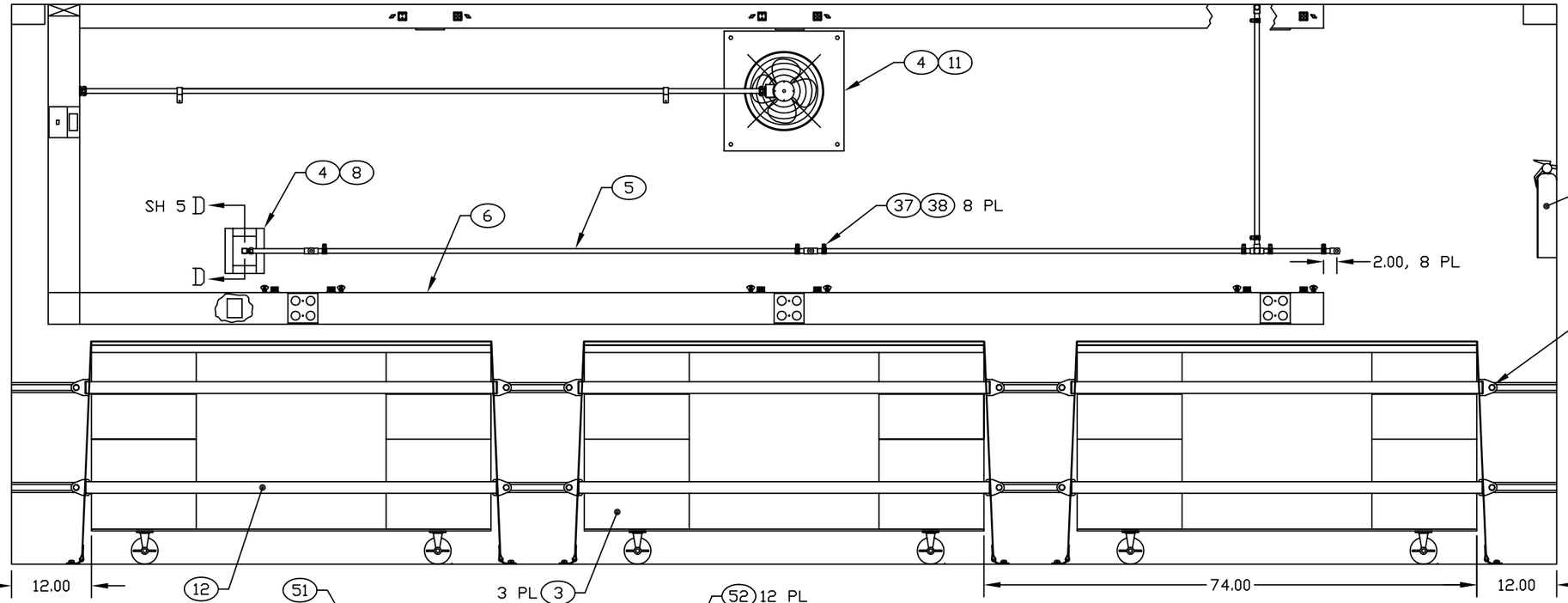


SECTION A-A SH 2
ROTATED 180°

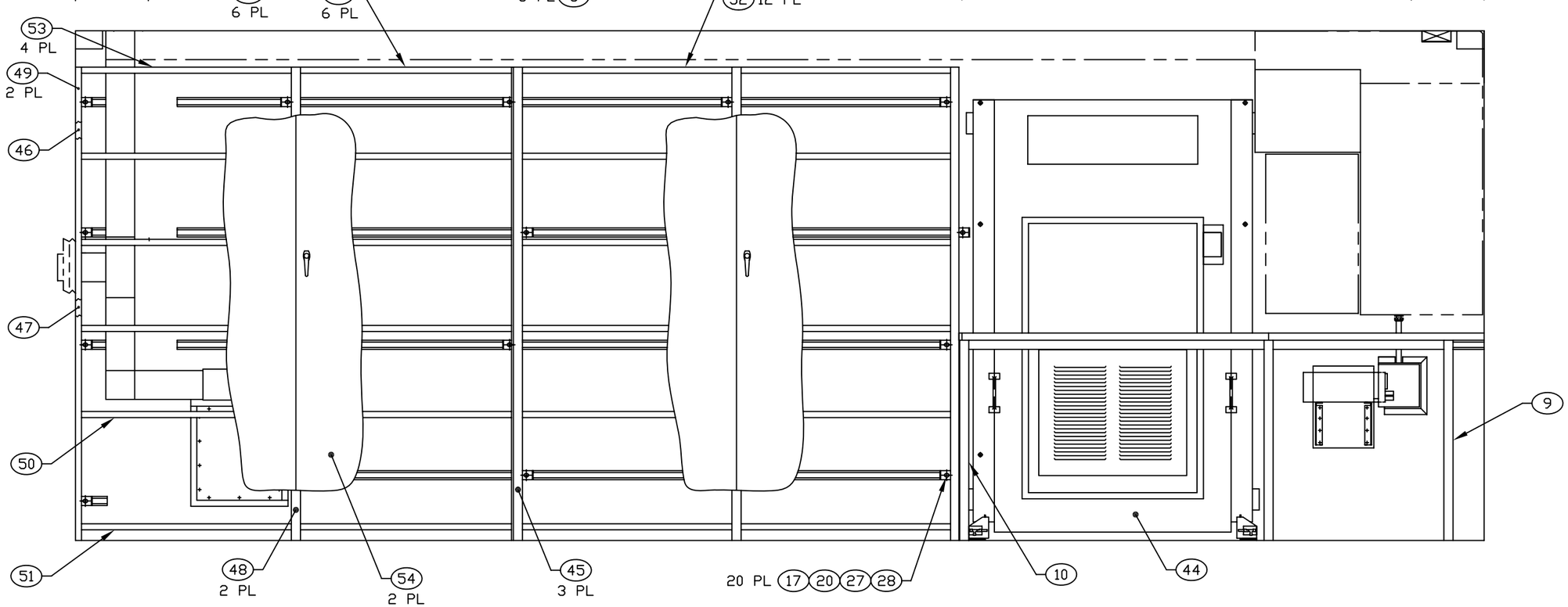


SECTION B-B SH 2

| ENGINEER | DATE | DRAWN BY | DATE | SIZE | CAGE CODE | DWG NO | REV |
|---|---|---|---|---|---|---|---|
| T. NGUYEN | 94-06 | T. NGUYEN | 94-06-24 | D | 91145 | MF BR010201 | A |
| NEXT ASSEMBLY | | CHECKER | | SCALE 1/10 | | SH 3 | |
| FINAL | | MAB | 94-08 | | | | |

BR012013.DWG